CITY OF COPPELL

DALLAS / DENTON COUNTY, TEXAS

STANDARD CONSTRUCTION DETAILS

REVISED JULY 01, 2014

CITY OF COPPELL ORDINANCE # 2006-1129

GENERAL NOTES

1. THESE STANDARD CONSTRUCTION DETAIL DRAWINGS ARE BASED ON THE STANDARD DRAWINGS PUBLISHED BY THE NORTH CENTRAL TEXAS COUNCIL OF GOVERNMENTS (NCTCOG) IN 1996. IN ADDITION TO NUMEROUS LOCAL EXCEPTIONS, MANY DETAILS IN THIS SET ARE UNIQUE TO THE CITY OF COPPELL. THESE STANDARD CONSTRUCTION DETAIL DRAWINGS SUPERSEDE ALL OTHER VERSIONS OF NCTCOG AND CITY OF COPPELL STANDARD CONSTRUCTION DETAILS. THE CITY OF COPPELL RESERVES THE RIGHT TO UPDATE, MODIFY OR SUPERSEDE THESE STANDARD CONSTRUCTION DETAIL DRAWINGS WITHOUT NOTICE. THE CITY OF COPPELL RESERVES THE RIGHT TO REQUIRE METHODS AND MATERIALS CONTRADICTORY TO THOSE SHOWN IN THESE DETAILS ON A CASE BY CASE BASIS.

2. THE CITY OF COPPELL HAS ADOPTED THE "Standard Specifications for Public Works Construction", 4TH EDITION, AS ITS BASIC CONSTRUCTION SPECIFICATIONS. THIS DOCUMENT IS AVAILABLE FOR PURCHASE FROM THE NORTH CENTRAL TEXAS COUNCIL OF GOVERNMENTS (NCTCOG), 616 SIX FLAGS DR., SUITE 200, P.O. BOX 5888, ARLINGTON TEXAS 76005–5888, PH. 817/640–3300, nctcog.org. THE CITY OF COPPELL RESERVES THE RIGHT TO MAKE LOCAL EXCEPTIONS TO ANY STANDARD SPECIFICATION.

3. WHERE THE STANDARD CONSTRUCTION DETAILS AND SPECIFICATIONS DO NOT ADDRESS A SPECIFIC ITEM ADEQUATELY, REFER TO THE APPROPRIATE STANDARDS PUBLISHED BY THE TEXAS DEPARTMENT OF TRANSPORTATION (TxDOT), THE TEXAS MANUAL ON UNIFORM TRAFFIC CONTROL DEVICES (T.M.U.T.C.D.), TEXAS COMMISSION ON ENVIRONMENTAL QUALITY (T.C.E.Q.), TEXAS POLLUTANT DISCHARGE ELIMINATION SYSTEM (T.P.D.E.S.) GENERAL PERMIT, AMERICAN ASSOCIATION OF STATE HIGHWAY AND TRANSPORTATION OFFICIALS (A.A.S.H.T.O.), ASTM International AND THE ENVIRONMENTAL PROTECTION AGENCY (E.P.A).

4. LOCAL, STATE AND FEDERAL ORDINANCES WHICH REGULATE DEVELOPMENT IN THE CITY OF COPPELL ARE:
   a. CITY OF COPPELL SUBDIVISION ORDINANCE.
   b. CITY OF COPPELL FLOODPLAIN ORDINANCE.
   c. CITY OF COPPELL IMPACT FEE ORDINANCE.
   d. CITY OF COPPELL EROSION CONTROL ORDINANCE.
   e. CITY OF COPPELL ZONING ORDINANCE.
   f. CITY OF COPPELL RIGHT–OF–WAY MANAGEMENT ORDINANCE.
   g. CITY OF COPPELL TREE ORDINANCE
   h. CITY OF COPPELL NOISE ORDINANCE
   i. CITY OF COPPELL CITY–WIDE STORM WATER MANAGEMENT STUDY
   j. TEXAS ACCESSIBILITY STANDARDS (T.A.S.)
   k. AMERICANS WITH DISABILITIES ACT (A.D.A.)

THE · CITY · OF
COPPELL
TEXAS · 1890

TABLE OF CONTENTS

Division 1000 EROSION & SEDIMENT CONTROL

1010 STRAW BALE DIKE
1020 SILT FENCE
1030 INTERCEPTOR SWALE
1040 DIVERSION DIKE
1050 TRIANGULAR SEDIMENT FILTER DIKE
1060 ROCK BERM
1070 STABILIZED CONSTRUCTION ENTRANCE
1080 SANDBAG BERM
1090 STONE OUTLET SEDIMENT TRAP
1100 SEDIMENT BASIN
1110 PIPE SLOPE DRAIN
1120 INLET PROTECTION
Grate Inlet Filter Barrier
1130 INLET PROTECTION
Block and Gravel
1135 INLET PROTECTION
Wattle Filter
1140 INLET PROTECTION
Wire Mesh and Gravel
1150 INLET PROTECTION
Excavated Impoundment
1160 EROSION CONTROL MATTING

Division 2000 PAVEMENT SYSTEMS

2010 REINFORCED CONCRETE PAVEMENT
Six–Lane Divided Thoroughfare
2020 REINFORCED CONCRETE PAVEMENT
Four–Lane Divided Thoroughfare
2025 REINFORCED CONCRETE PAVEMENT
Dedicated Left Turn Lane
2030 REINFORCED CONCRETE PAVEMENT
2– & 4–Lane Undivided Thoroughfare
2035 REINFORCED CONCRETE PAVEMENT
28' B–B Residential Street
2040 REINFORCED CONCRETE PAVEMENT
Alleys
2050 REINFORCED CONCRETE PAVEMENT
Pavement Joints
2060 REINFORCED CONCRETE PAVEMENT
Transverse Joint Spacing
2070 REINFORCED CONCRETE PAVEMENT
Street Headers
2080 NOT USED

Division 2000 PAVEMENT SYSTEMS Continued...

2090 NOT USED
2100 NOT USED
2110 HOT MIX ASPHALTIC CONCRETE PAVEMENT
Two–Lane Undivided Thoroughfare
2120 CONCRETE CURB AND GUTTER
Integral and Separate
2130 MEDIAN ISLAND PAVEMENT
Left Turn Lane with Sloped Nose
2140 MEDIAN ISLAND PAVEMENT
Median Island with Sloped Nose
2150–1 DRIVEWAY APPROACH
Type "A"
2150–2 DRIVEWAY APPROACH
Type "A"
2155–1 DRIVEWAY APPROACH
Type "B"
2155–2 DRIVEWAY APPROACH
Type "B"
2160–1 ALLEY APPROACH
Radius Return Type
2160–2 ALLEY APPROACH
Radius Return Type
2165–1 ALLEY APPROACH REPLACEMENT
Flared Type
2165–2 ALLEY APPROACH REPLACEMENT
Flared Type
2170 REINFORCED CONCRETE SIDEWALK
Joints and Spacing
2180 REINFORCED CONCRETE RETAINING WALL
Integral with Sidewalk
2185–1 ACCESSIBLE ROUTES, RAMPS AND CROSSWALKS
Collector Streets and Thoroughfares
2185–2 ACCESSIBLE ROUTES, RAMPS AND CROSSWALKS
Collector Streets and Thoroughfares
2185–3 ACCESSIBLE ROUTES, RAMPS AND CROSSWALKS
Residential Streets W/O R.O.W. Corner Clip
2185–4 ACCESSIBLE ROUTES, RAMPS AND CROSSWALKS
Residential Streets W/O R.O.W. Corner Clip
2185–5 ACCESSIBLE ROUTES, RAMPS AND CROSSWALKS
Residential Streets W/ R.O.W. Corner Clip
2185–6 ACCESSIBLE ROUTES, RAMPS AND CROSSWALKS
Residential Streets W/ R.O.W. Corner Clip
2190 COMMERCIAL DRIVEWAY DECORATIVE PAVING
Stamped Concrete / Concrete Paver Installation
2195 PAVEMENT SYSTEMS GENERAL NOTES
2200 SUBDRAINS
Pavement Subgrade
2210 ALLEY GEOMETRICS
Type "A" and Type "B"
2220 ALLEY GEOMETRICS
Type "C" and Type "D"
2230 ALLEY GEOMETRICS
Type "E" and Type "F"
2240 ALLEY GEOMETRICS
Type "G" and Type "H"
2250 ALLEY GEOMETRICS
Type "J"
2260 ALLEY INTERSECTION
Proposed to Existing
2270 GUARD RAIL AND BARRICADING NOTE
2280 TRAFFIC CONTROL NOTE
2290 FIRE LANE AND PARKING LOT
Reinforced Concrete
2300 FIRE LANE AND PARKING LOT
Hot Mix Asphaltic Concrete
2310 FIRE LANE AND PARKING LOT
Type "A" and Type "B" Turnaround
2320 FIRE LANE AND PARKING LOT
Fire Lane Marking
2330 BOLLARD AND SIGN FOUNDATION
1 2340 TRAFFIC SIGNALS
Collector Streets and Thoroughfares
2350 PAVEMENT SYSTEMS TESTING REQUIREMENTS

1 NEW STANDARD CONSTRUCTION DETAIL. SWL JUL. '14

THE · CITY · OF
COPPELL
TEXAS · 1890

TABLE OF CONTENTS

Division 3000 GENERAL UNDERGROUND CONDUIT

3010 EMBEDMENT
Class "A" and "A–1"
3020 EMBEDMENT
Storm Drain
3030 EMBEDMENT
Water Main
3040 NOT USED
3050 EMBEDMENT
Sanitary Sewer
3060 EMBEDMENT
Class "G" and "G–1"
3070 PAVEMENT CUTS
Removal and Replacement
3080 NOT USED
3090 ENCASEMENT
Roadway Crossing Bore
3095 GENERAL UNDERGROUND CONDUIT
Irrigation Sleeving and Electrical Conduit
3100 GENERAL UNDERGROUND CONDUIT
General Notes and Testing

Division 4000 WATER DISTRIBUTION

4010–1 HORIZONTAL THRUST BLOCK
At Pipe Bend
4010–2 HORIZONTAL THRUST BLOCK
At Pipe Bend
4020 HORIZONTAL THRUST BLOCK
At Tees and Plugs
4030 VERTICAL THRUST BLOCK
At Pipe Bend
4040 THRUST BLOCK
General Notes
4050 GATE VALVE 16" AND SMALLER
Installation
4060–1 NOT USED
4060–2 NOT USED
4070–1 VAULT CONSTRUCTION
Vertical Gate Valve Larger than 16"
4070–2 VAULT CONSTRUCTION
Vertical Gate Valve Larger than 16"
4080 NOT USED

1 NEW STANDARD CONSTRUCTION DETAIL. SWL JUL. '14

Division 4000 WATER DISTRIBUTION Continued...

4090 AIR RELEASE VALVE
Type 1
4100–1 AIR RELEASE VALVE
Type 2
4100–2 AIR RELEASE VALVE
Details
4110 BLOW–OFF VALVE
Type 1
4120 FIRE HYDRANT
Installation
4130 METER SETTING
3/4" Meter – Residential Domestic
4135 METER SETTING
3/4" Meter – Irrigation or Commercial Domestic
4140 METER SETTING
1" Meter – Residential Domestic
4145 METER SETTING
1" Meter – Irrigation or Commercial Domestic
4150 METER SETTING
1–1/2" or 2" Meter – Domestic
4155 METER SETTING
1–1/2" or 2" Meter – Irrigation
4160 DETECTOR CHECK VALVE INSTALLATION
3" to 6" Service
1 4162 DOMESTIC AND IRRIGATION SERVICE INSTALLATION
3" to 6" Service
4165 DETECTOR CHECK VALVE INSTALLATION
8" to 12" Service
4170 FIRE DEPARTMENT CONNECTION (F.D.C.)
Located Outside Paving
4175 FIRE DEPARTMENT CONNECTION (F.D.C.)
Located Inside Paving
4180 BUILDING FIRE SPRINKLER SYSTEM
Connection to Private Water Main
4190 DETECTOR CHECK VAULT
Pre–Cast Construction
4195 DETECTOR CHECK VAULT
Cast–In–Place Construction
4200 WATER MAIN ADJUSTMENT
at Storm Drain Crossing
4210 WATER MAIN ADJUSTMENT
at Sanitary Sewer Crossing
4220 VALVE LOCATION AND IDENTIFICATION
Curb Lettering and Color Coding
1 4225 WATER MAIN ABANDONMENT
Inside and Outside of Pavement
4230 WATER DISTRIBUTION
Testing Requirements

THE CITY OF COPPELL TEXAS 1890

TABLE OF CONTENTS

Division 5000 SANITARY SEWER

5010 SANITARY SEWER
Main Tie–in at Cleanout or Stubout
5020 SANITARY SEWER
Manhole: Pre–Cast
5030 SANITARY SEWER
Manhole: Cast–in–Place
5040 NOT USED
5050 SANITARY SEWER
Manhole: Pressure Type
5060 SANITARY SEWER
Manhole: Vented Type
5070 SANITARY SEWER
Manhole: Outside Drop Connection
5080 SANITARY SEWER
Manhole: Inside Drop Connection
5090 SANITARY SEWER
Manhole: Line Intersection
5100 SANITARY SEWER
Manhole: False Bottom
5105 SANITARY SEWER
Wastewater Access Device (W.A.D.)
5110 SANITARY SEWER
Cleanout
5120 SANITARY SEWER
Standard Service Connection
5130 SANITARY SEWER
Deep Service Connection
5140 SANITARY SEWER
Lateral Replacement Prior to Paving
5150 SANITARY SEWER
Manhole Abandonment In and Out of Paving
5160 SANITARY SEWER
Aerial Crossing
5170 MANHOLE AND CLEANOUT LOCATION AND IDENTIFICATION
Curb Lettering and Color Coding
5180 SANITARY SEWER
General Notes and Testing

Division 6000 STORM DRAIN

6010 STORM DRAIN
Manhole 4', 5', or 6' Square
6020–1 STORM DRAIN
Curb Inlet: 5', 10', 15' or 20' Opening
6020–2 STORM DRAIN
Curb Inlet: 5', 10', 15' or 20' Opening
6020–3 STORM DRAIN
Curb Inlet: Rebar, Manhole Frame and Cover
6020–4 STORM DRAIN
Curb Inlet: Bill of Reinforcing Steel
6020–5 STORM DRAIN
Curb Inlet: Summary of Quantities
6030–1 STORM DRAIN
Recessed Curb Inlet: 5', 10', 15' or 20'
6030–2 STORM DRAIN
Recessed Curb Inlet: 5', 10', 15' or 20'
6030–3 STORM DRAIN
Recessed Curb Inlet: Throat and Manhole Cover
6030–4 STORM DRAIN
Recessed Curb Inlet: General Notes
6040 STORM DRAIN
Drop Inlet
6050 STORM DRAIN
Grate Inlet
6060 STORM DRAIN
Full Channel Lining
6070 STORM DRAIN
Vertical Headwall
6080 STORM DRAIN
Sloping Headwall
1 6085 STORM DRAIN
Pipe Collar and Field Connection
6090 STORM DRAIN
General Notes and Testing

1 NEW STANDARD CONSTRUCTION DETAIL. SWL JUL. '14

THE · CITY · OF
COPPELL
TEXAS · 1890

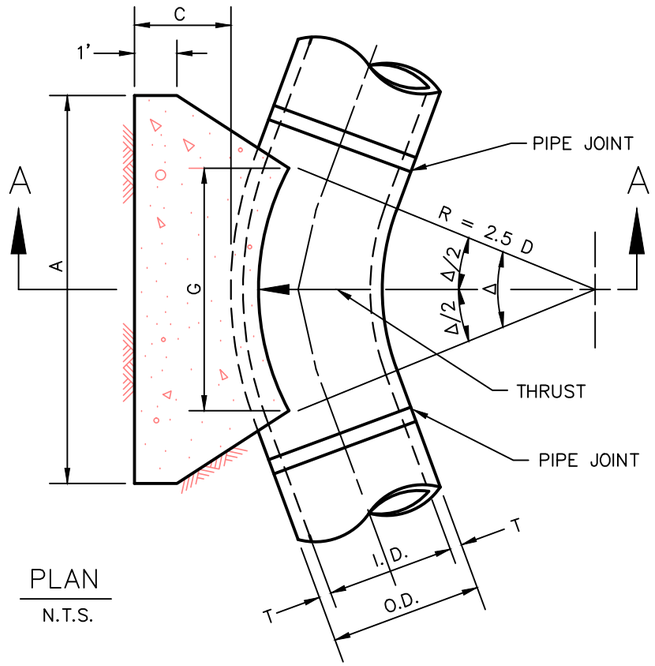

PLAN

N.T.S.

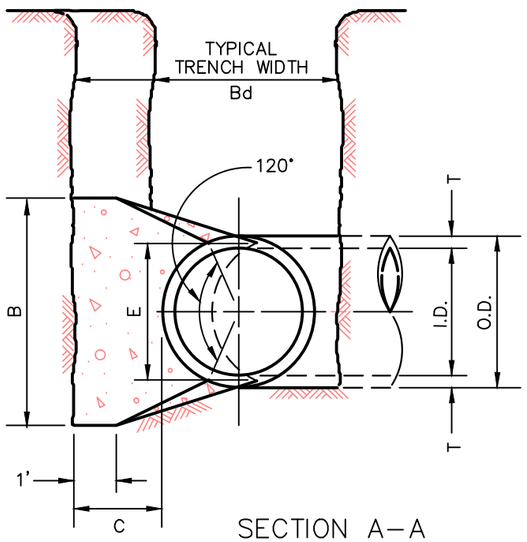

SECTION A–A

N.T.S.

I.D. (IN.)	T (IN.)	Δ = 11.25° (FT.)	Δ ≥ 22.50° (FT.)	E (FT.)
4,6,8	0.4	1.5	1.5	0.9
10,12	0.5	1.5	1.5	1.2
16,18	0.6	1.5	1.5	1.6
20	0.7	1.5	1.5	1.8
24	0.9	1.5	1.5	2.1
30	2.9	1.5	1.9	2.6
36	4.5	1.5	2.3	3.3
42	5.0	1.8	2.6	3.8
48	5.5	2.0	3.0	4.3
54	6.0	2.3	3.4	4.8
60	6.5	2.5	3.8	5.3
66	6.8	2.8	4.1	5.7
72	7.5	3.0	4.5	6.3
78	7.5	3.3	4.9	6.7
84	8.0	3.5	5.3	7.2
90	8.5	3.8	5.6	7.7
96	9.0	4.0	6.0	8.2

I.D. (IN.)	Δ = 11.25°								I.D. (IN.)	Δ= 22.50°							
	G (FT.)	THRUST (TONS)	EARTH			ROCK				G (FT.)	THRUST (TONS)	EARTH			ROCK		
			A (FT.)	B (FT.)	VOL. (C.Y.)	A (FT.)	B (FT.)	VOL. (C.Y.)				A (FT.)	B (FT.)	VOL. (C.Y.)	A (FT.)	B (FT.)	VOL. (C.Y.)
4,6,8	0.4	1.0	1.0	1.5	0.1	1.0	1.0	0.1	4,6,8	0.8	2.0	1.5	1.5	0.1	1.0	1.0	0.1
10,12	0.6	2.2	1.5	1.5	0.1	1.0	1.5	0.1	10,12	1.1	4.4	2.0	2.5	0.3	1.5	1.5	0.1
16,18	0.8	5.0	2.0	2.5	0.3	1.5	2.0	0.2	16,18	1.6	9.9	3.0	3.5	0.6	2.0	2.5	0.3
20	0.9	6.2	2.0	3.5	0.4	1.5	3.0	0.3	20	1.8	12.3	3.5	3.5	0.7	2.0	3.0	0.4
24	1.1	8.9	3.0	3.5	0.5	1.5	3.0	0.3	24	2.2	17.7	4.0	4.5	1.0	3.0	3.5	0.5
30	1.4	10.4	3.0	3.5	0.6	2.0	3.5	0.4	30	2.7	20.7	5.0	4.5	1.5	3.0	4.0	0.8
36	1.7	15.0	3.5	4.5	0.9	2.0	4.0	0.5	36	3.3	29.8	5.5	5.5	2.3	4.0	4.0	1.3
42	1.9	20.4	4.5	5.0	1.5	2.5	5.0	0.8	42	3.8	40.5	7.0	6.0	3.9	4.5	5.0	2.1
48	2.2	26.6	4.5	6.0	2.0	2.5	6.0	1.1	48	4.4	52.9	8.0	7.0	5.7	4.5	6.0	2.8
54	2.5	33.7	6.0	6.0	3.0	3.0	6.0	1.4	54	4.9	67.0	9.0	8.0	8.0	6.0	6.0	4.1
60	2.7	41.6	6.0	7.0	3.8	3.0	7.0	1.8	60	5.5	82.7	9.5	9.0	10.6	6.0	7.0	5.3
66	3.0	50.3	6.5	8.0	5.1	3.5	8.0	2.7	66	6.0	100.1	10.5	10.0	14.1	6.5	8.0	7.2
72	3.3	59.9	7.5	8.0	6.3	4.0	8.0	3.3	72	6.6	119.1	11.0	11.0	17.6	7.5	8.0	9.1
78	3.6	70.2	8.0	9.0	8.1	4.0	9.0	3.9	78	7.1	139.8	12.0	12.0	22.5	8.0	9.0	11.7
84	3.8	81.5	8.5	10.0	10.3	4.5	10.0	5.3	84	7.6	162.1	13.0	12.5	27.2	8.5	10.0	14.8
90	4.1	93.5	9.5	10.0	12.2	5.0	10.0	6.3	90	8.2	186.1	14.0	13.5	33.7	9.5	10.0	17.7
96	4.4	106.4	10.0	11.0	15.0	5.0	11.0	7.4	96	8.7	211.7	15.0	14.5	41.2	10.0	11.0	21.8

TABLES OF DIMENSIONS AND QUANTITIES

REFER TO
STD. DWG. No. 4040
FOR GENERAL NOTES.

North Central Texas Council of Governments

NOTE: STANDARDS ARE ADOPTED FROM THE NCTOG STANDARD DRAWINGS DATED NOV. '96, WITH LOCAL EXCEPTIONS.

NO.	LOCAL EXCEPTION	BY	DATE

THE CITY OF COPPELL TEXAS 1890

STANDARD CONSTRUCTION DETAILS

HORIZONTAL THRUST BLOCK
AT PIPE BEND

CITY OF COPPELL DALLAS COUNTY, TEXAS

STD. SPEC. REFERENCE
303., 502.

STANDARD DETAIL
4010-1

PATH: S:\Standard_Details\New_Dets_modified\SDCoppell2005.dwg

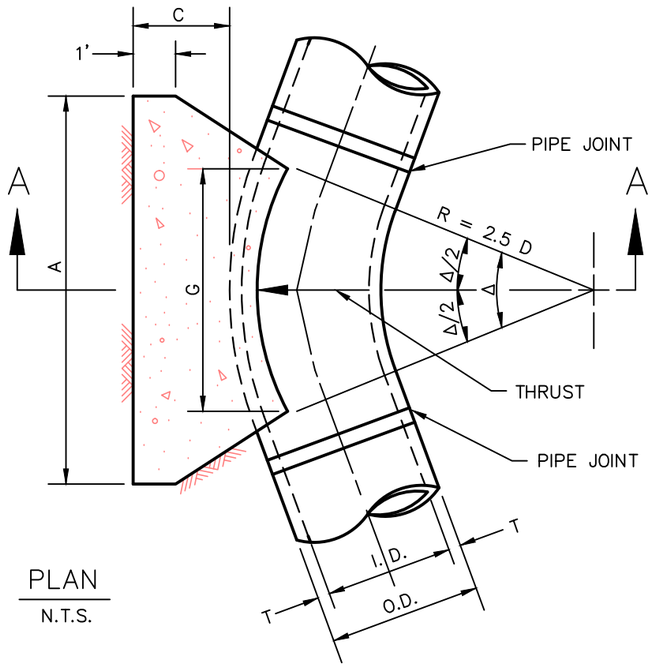

PLAN

N.T.S.

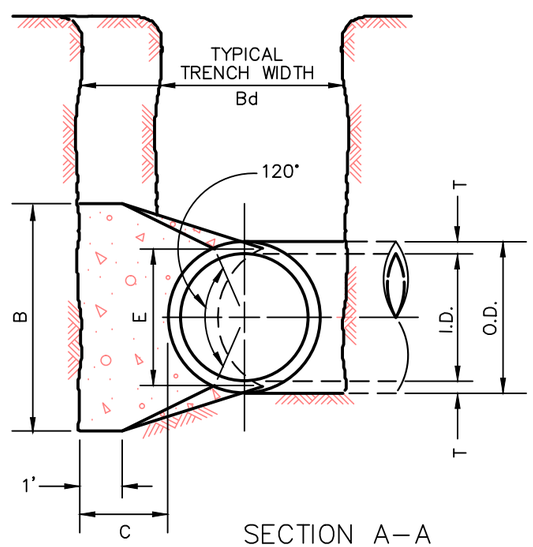

SECTION A–A

N.T.S.

I.D. (IN.)	T (IN.)	Δ = 11.25° (FT.)	Δ ≥ 22.50° (FT.)	E (FT.)
4,6,8	0.4	1.5	1.5	0.9
10,12	0.5	1.5	1.5	1.2
16,18	0.6	1.5	1.5	1.6
20	0.7	1.5	1.5	1.8
24	0.9	1.5	1.5	2.1
30	2.9	1.5	1.9	2.6
36	4.5	1.5	2.3	3.3
42	5.0	1.8	2.6	3.8
48	5.5	2.0	3.0	4.3
54	6.0	2.3	3.4	4.8
60	6.5	2.5	3.8	5.3
66	6.8	2.8	4.1	5.7
72	7.5	3.0	4.5	6.3
78	7.5	3.3	4.9	6.7
84	8.0	3.5	5.3	7.2
90	8.5	3.8	5.6	7.7
96	9.0	4.0	6.0	8.2

REFER TO
STD. DWG. No. 4040
FOR GENERAL NOTES.

I.D. (IN.)	Δ = 30°								I.D. (IN.)	Δ = 45°							
	G (FT.)	THRUST (TONS)	EARTH			ROCK				G (FT.)	THRUST (TONS)	EARTH			ROCK		
			A (FT.)	B (FT.)	VOL. (C.Y.)	A (FT.)	B (FT.)	VOL. (C.Y.)				A (FT.)	B (FT.)	VOL. (C.Y.)	A (FT.)	B (FT.)	VOL. (C.Y.)
4,6,8	1.0	2.6	2.0	1.5	0.2	1.0	1.5	0.1	4,6,8	1.5	3.9	2.0	2.0	0.2	1.5	1.5	0.1
10,12	1.5	5.9	2.5	2.5	0.3	2.0	1.5	0.2	10,12	2.2	8.7	3.5	2.5	0.5	2.0	2.5	0.3
16,18	2.2	13.2	3.5	4.0	0.8	2.5	3.0	0.4	16,18	3.2	19.5	4.5	4.5	1.2	3.0	3.5	0.6
20	2.4	16.3	4.5	4.0	1.0	3.0	3.0	0.5	20	3.6	24.1	5.5	4.5	1.5	3.5	3.5	0.7
24	2.9	23.4	6.0	4.0	1.4	3.5	3.5	0.7	24	4.3	34.6	8.0	4.5	2.3	4.5	4.0	1.1
30	3.6	27.5	6.5	5.0	1.9	3.5	4.0	0.9	30	5.4	40.6	8.5	5.0	3.2	5.5	4.0	1.6
36	4.4	39.5	7.0	6.0	3.4	4.5	4.5	1.6	36	6.5	58.5	10.0	6.0	5.3	6.5	4.5	2.6
42	5.1	53.8	8.0	7.0	5.1	5.5	5.0	2.5	42	7.5	79.6	11.5	7.0	8.1	8.0	5.0	4.2
48	5.8	70.3	9.0	8.0	7.4	6.0	6.0	3.7	48	8.6	104.0	13.0	8.0	11.9	9.0	6.0	6.3
54	6.5	89.0	10.0	9.0	10.3	7.0	6.5	5.3	54	9.7	131.5	15.0	9.0	17.1	10.5	6.5	8.9
60	7.3	110.0	11.0	10.0	13.9	7.5	7.5	7.3	60	10.7	162.4	16.5	10.0	23.1	11.0	7.5	12.0
66	8.0	132.9	12.5	11.0	18.9	8.5	8.0	9.6	66	11.8	196.5	18.0	11.0	30.1	12.0	8.5	16.2
72	8.7	158.2	13.5	12.0	24.0	9.0	9.0	12.3	72	12.9	233.9	19.5	12.0	38.6	14.0	8.5	20.7
78	9.4	185.6	14.5	13.0	30.0	10.0	9.5	15.6	78	13.9	274.5	21.5	13.0	49.8	14.5	9.5	25.9
84	10.1	215.3	15.5	14.0	37.1	10.5	10.5	19.5	84	15.0	318.4	23.0	14.0	61.2	15.5	10.5	32.6
90	10.9	247.1	16.5	15.0	45.0	11.5	11.0	23.9	90	16.1	365.5	24.5	15.0	74.5	17.5	10.5	39.6
96	11.6	281.2	18.0	16.0	55.5	12.5	11.5	28.9	96	17.1	415.6	26.0	16.0	89.5	18.5	11.5	48.5

I.D. (IN.)	Δ = 67.50°								I.D. (IN.)	Δ = 90°							
	G (FT.)	THRUST (TONS)	EARTH			ROCK				G (FT.)	THRUST (TONS)	EARTH			ROCK		
			A (FT.)	B (FT.)	VOL. (C.Y.)	A (FT.)	B (FT.)	VOL. (C.Y.)				A (FT.)	B (FT.)	VOL. (C.Y.)	A (FT.)	B (FT.)	VOL. (C.Y.)
4,6,8	2.1	5.6	3.0	2.0	0.3	2.0	1.5	0.2	4,6,8	2.7	7.1	5.0	1.5	0.4	2.0	2.0	0.2
10,12	3.1	12.6	5.5	2.5	0.8	3.5	2.0	0.4	10,12	4.0	16.0	6.5	2.5	1.0	3.5	2.5	0.5
16,18	4.7	28.3	7.5	4.0	1.9	5.5	3.0	0.9	16,18	6.0	36.0	9.0	4.0	2.4	4.5	4.0	1.0
20	5.2	34.9	9.0	4.0	2.3	5.5	3.5	1.2	20	6.6	44.4	10.0	4.5	3.1	6.0	4.0	1.5
24	6.2	50.3	11.5	4.5	3.5	6.5	4.0	1.6	24	7.9	64.0	14.5	4.5	5.0	8.0	4.0	2.1
30	7.8	58.9	12.0	5.0	4.8	7.5	4.0	2.2	30	9.9	75.0	15.0	5.0	6.7	10.0	4.0	3.3
36	9.4	84.9	14.5	6.0	8.2	9.5	4.5	3.8	36	11.9	108.0	18.0	6.0	11.4	12.0	4.5	5.3
42	10.9	115.5	17.0	7.0	12.8	11.0	5.5	6.3	42	13.9	147.0	21.0	7.0	17.8	14.0	5.5	8.7
48	12.5	150.9	19.0	8.0	18.4	13.0	6.0	9.2	48	15.9	192.0	24.0	8.0	26.2	16.0	6.0	12.4
54	14.0	191.0	21.5	9.0	26.0	15.0	6.5	12.9	54	17.9	243.0	27.0	9.0	36.9	18.0	7.0	18.1
60	15.6	235.8	24.0	10.0	35.6	16.0	7.5	17.6	60	19.9	299.8	30.0	10.0	50.3	20.0	7.5	24.0
66	17.1	285.3	26.0	11.0	46.0	18.0	8.0	23.0	66	21.8	362.8	33.0	11.0	66.2	22.0	8.5	32.5
72	18.7	339.5	28.5	12.0	57.8	19.0	9.0	28.4	72	23.8	431.8	36.0	12.0	85.6	24.0	9.0	41.0
78	20.2	398.5	31.0	13.0	75.7	21.0	9.5	37.4	78	25.7	506.7	39.0	13.0	108.2	26.0	10.0	53.2
84	21.8	462.1	33.5	14.0	94.7	22.0	10.5	46.5	84	27.7	587.7	42.0	14.0	134.4	28.0	10.5	64.8
90	23.3	530.5	35.5	15.0	114.4	24.5	11.0	58.2	90	29.0	674.6	45.0	15.0	164.9	30.0	11.5	81.2
96	24.9	603.6	38.0	16.0	138.9	25.5	12.0	70.0	96	31.6	767.5	48.0	16.0	199.0	32.0	12.0	95.1

TABLES OF DIMENSIONS AND QUANTITIES

North Central Texas Council of Governments

NOTE: STANDARDS ARE ADOPTED FROM THE NCTOG STANDARD DRAWINGS DATED NOV. '96, WITH LOCAL EXCEPTIONS.

NO.	LOCAL EXCEPTION	BY	DATE

THE CITY OF COPPELL TEXAS 1890

STANDARD CONSTRUCTION DETAILS

HORIZONTAL THRUST BLOCK AT PIPE BEND

CITY OF COPPELL DALLAS COUNTY, TEXAS

STD. SPEC. REFERENCE 303., 502.

STANDARD DETAIL 4010-2

PATH: S:\Standard_Details\New_Dets_modified\SDCoppell2005.dwg

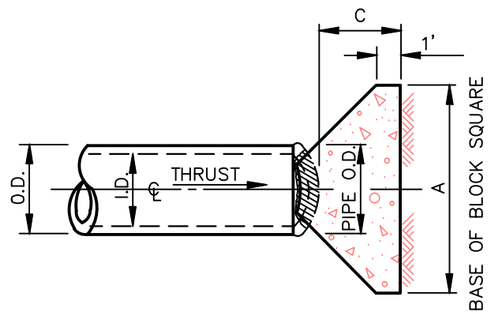

PLAN OF PLUG THRUST BLOCK

N.T.S.

REFER TO
STD. DWG. No. 4040
FOR GENERAL NOTES.

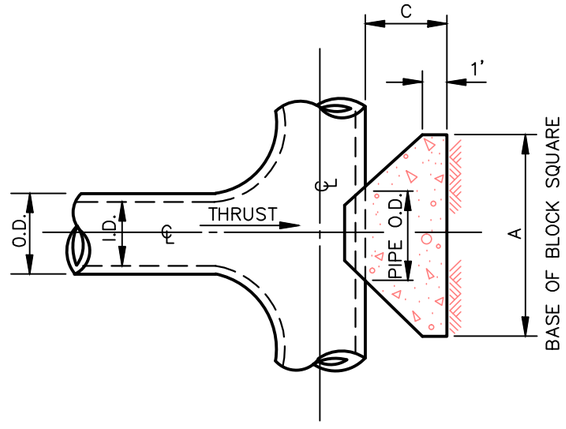

PLAN OF TEE THRUST BLOCK

N.T.S.

			EARTH		ROCK	
I.D. (IN.)	THRUST (TONS)	C (FT.)	A (FT.)	VOL. (C.Y.)	A (FT.)	VOL. (C.Y.)
4,6,8	5.1	1.5	2.5	0.3	2.0	0.2
10,12	11.3	1.5	3.5	0.6	2.5	0.3
16,18	25.5	2.0	5.5	1.6	4.0	0.9
20	31.5	2.0	6.0	1.9	4.0	0.9
24	45.2	2.5	7.0	3.1	5.0	1.7
30	53.0	3.0	7.5	4.1	5.5	2.4
36	76.3	4.0	9.0	7.3	6.5	4.2
42	104.0	4.5	10.5	11.0	7.5	6.2
48	136.0	5.0	12.0	15.6	8.5	8.7
54	172.0	5.5	13.5	21.4	9.5	11.9
60	212.0	6.0	15.0	28.4	10.5	15.7
66	257.0	6.5	16.5	36.8	11.5	20.5
72	305.0	7.5	17.5	47.2	12.5	27.2
78	358.0	8.0	19.0	58.9	13.5	33.7
84	416.0	8.5	20.5	72.3	14.5	41.2
90	477.0	9.0	22.0	87.7	15.5	49.7
96	543.0	9.5	23.5	104.8	16.5	61.0

TABLE OF DIMENSIONS AND QUANTITIES

North Central Texas Council of Governments

NOTE: STANDARDS ARE ADOPTED FROM THE NCTOG STANDARD DRAWINGS DATED NOV. '96, WITH LOCAL EXCEPTIONS.

NO.	LOCAL EXCEPTION	BY	DATE

THE CITY OF COPPELL TEXAS 1890

STANDARD CONSTRUCTION DETAILS

HORIZONTAL THRUST BLOCK
AT TEES AND PLUGS

CITY OF COPPELL DALLAS COUNTY, TEXAS

STD. SPEC. REFERENCE
303., 502.

STANDARD DETAIL
4020

PATH: S:\Standard_Details\New_Dets_modified\SDCoppell2005.dwg

Δ →	11.25°		22.50°		30°		45°		67.50°		90°		← Δ
I.D. (IN.)	THRUST (TONS)	VOL. (C.Y.)	THRUST (TONS)	VOL. (C.Y.)	THRUST (TONS)	VOL. (C.Y.)	THRUST (TONS)	VOL. (C.Y.)	THRUST (TONS)	VOL. (C.Y.)	THRUST (TONS)	VOL. (C.Y.)	I.D. (IN.)
4,6,8	1.0	0.5	2.0	1.0	2.5	1.3	3.6	1.8	4.6	2.3	5.0	2.5	4,6,8
10,12	2.2	1.1	4.3	2.2	5.7	2.8	8.0	4.0	10.5	5.2	11.3	5.7	10,12
16,18	5.0	2.5	9.7	4.9	12.7	6.4	18.0	9.0	23.5	11.8	25.5	12.7	16,18
20	6.1	3.1	12.0	6.0	15.7	7.9	22.2	11.1	29.2	14.5	31.4	15.7	20
24	8.2	4.4	17.3	8.7	22.6	11.3	32.0	16.0	41.8	20.9	45.2	22.6	24
30	10.5	5.2	20.3	10.1	26.5	13.3	37.5	18.8	49.0	24.5	53.1	26.5	30
36	14.9	7.5	29.2	14.6	38.2	19.1	54.0	27.0	70.5	35.3	76.4	38.2	36
42	20.3	10.1	39.8	19.9	52.0	26.0	73.5	36.7	96.0	48.0	104.0	52.0	42
48	26.5	13.2	51.9	26.0	67.9	33.9	96.0	48.0	126.0	62.7	136.0	67.9	48
54	33.5	16.8	65.7	32.9	85.9	42.9	122.0	60.7	159.0	79.4	172.0	85.9	54
60	41.4	20.7	81.2	40.6	106.0	53.0	150.0	75.0	196.0	98.0	212.0	106.0	60
66	50.1	25.0	98.2	49.1	128.0	64.2	182.0	90.7	237.0	119.0	257.0	128.0	66
72	59.6	29.8	117.0	58.4	153.0	76.3	216.0	108.0	282.0	141.0	305.0	153.0	72
78	69.9	35.0	137.0	68.6	179.0	90.0	254.0	127.0	331.0	166.0	358.0	179.0	78
84	81.1	40.5	159.0	79.5	208.0	104.0	294.0	147.0	384.0	192.0	416.0	208.0	84
90	93.1	46.5	183.0	91.3	239.0	119.0	337.0	169.0	441.0	221.0	477.0	239.0	90
96	106.0	53.0	208.0	104.0	272.0	136.0	384.0	192.0	502.0	251.0	543.0	272.0	96

TABLE OF DIMENSIONS AND QUANTITIES

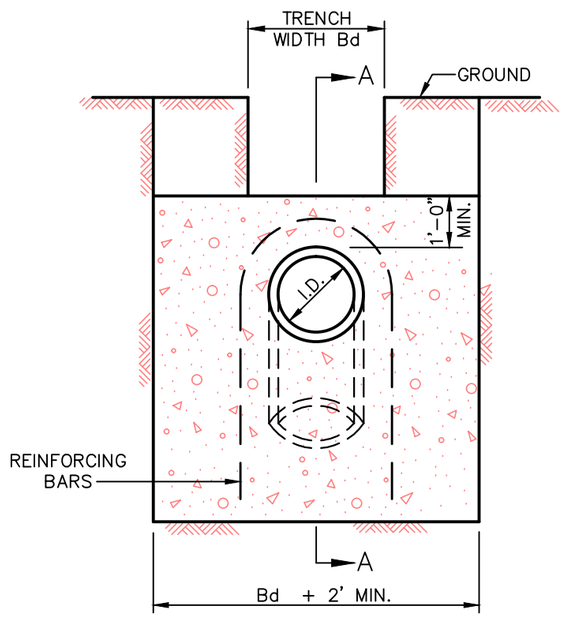

VIEW B–B

N.T.S.

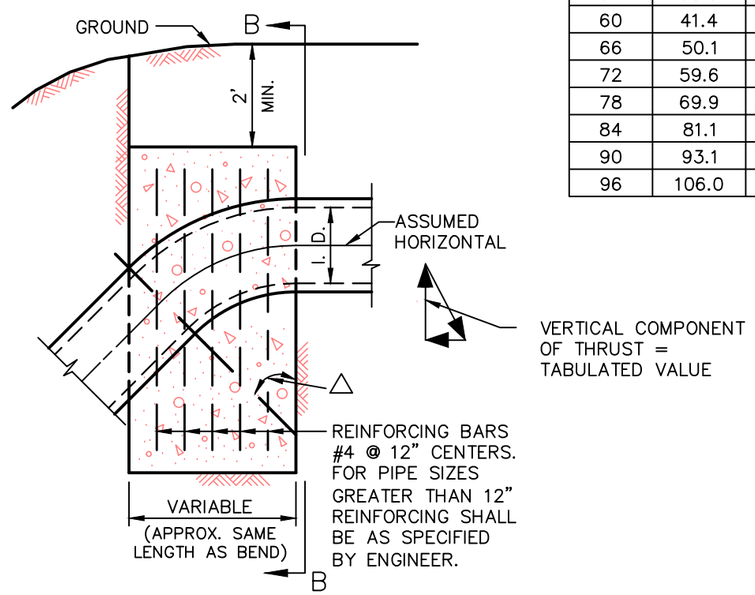

SECTION A–A

N.T.S.

REFER TO
STD. DWG. No. 4040
FOR GENERAL NOTES.

North Central Texas Council of Governments

NOTE: STANDARDS ARE ADOPTED FROM THE NCTOG STANDARD DRAWINGS DATED NOV. '96, WITH LOCAL EXCEPTIONS.

NO.	LOCAL EXCEPTION	BY	DATE

THE CITY OF COPPELL TEXAS 1840

STANDARD CONSTRUCTION DETAILS

VERTICAL THRUST BLOCK
AT PIPE BEND

CITY OF COPPELL DALLAS COUNTY, TEXAS

STD. SPEC. REFERENCE
303., 502.

STANDARD DETAIL
4030

PATH: S:\Standard_Details\New_Dets_modified\SDCoppell2005.dwg

GENERAL NOTES FOR ALL THRUST BLOCKS:

1. CONCRETE FOR BLOCKING SHALL BE CLASS "B".
2. ALL CALCULATIONS ARE BASED ON INTERNAL PRESSURE OF 200 PSI FOR DUCTILE IRON, P.V.C., AND 150 PSI FOR CONCRETE PIPE.
3. VOLUMES OF THRUST BLOCKS ARE NET VOLUMES OF CONCRETE TO BE FURNISHED. THE CORRESPONDING WEIGHT OF THE CONCRETE (CLASS "B") IS EQUAL TO OR GREATER THAN THE VERTICAL COMPONENT OF THE THRUST ON THE VERTICAL BEND.
4. WALL THICKNESS (T) ASSUMED HERE FOR ESTIMATING PURPOSES ONLY.
5. POUR CONCRETE FOR BLOCK AGAINST UNDISTURBED EARTH.
6. DIMENSIONS MAY BE VARIED AS REQUIRED BY FIELD CONDITIONS WHERE AND AS DIRECTED BY THE ENGINEER. THE VOLUME OF CONCRETE BLOCKING SHALL NOT BE LESS THAN SHOWN HERE.
7. THE SOIL BEARING PRESSURES ARE BASED ON 1000 LBS./S.F. IN SOIL AND 2000 LBS./S.F. IN ROCK.
8. USE POLYETHYLENE WRAP OR APPROVED EQUAL BETWEEN CONCRETE AND BEND, TEE, OR PLUG TO PREVENT CONCRETE FROM ADHERING TO IT.
9. CONCRETE SHALL NOT EXTEND BEYOND JOINTS.

North Central Texas Council of Governments

NOTE: STANDARDS ARE ADOPTED FROM THE NCTOG STANDARD DRAWINGS DATED NOV. '96, WITH LOCAL EXCEPTIONS.

NO.	LOCAL EXCEPTION	BY	DATE

THE CITY OF COPPELL TEXAS 1890

STANDARD CONSTRUCTION DETAILS

THRUST BLOCK
GENERAL NOTES

CITY OF COPPELL DALLAS COUNTY, TEXAS

STD. SPEC. REFERENCE
502., 702.

STANDARD DETAIL
4040

PATH: S:\Standard_Details\New_Dets_modified\SDCoppell2005.dwg

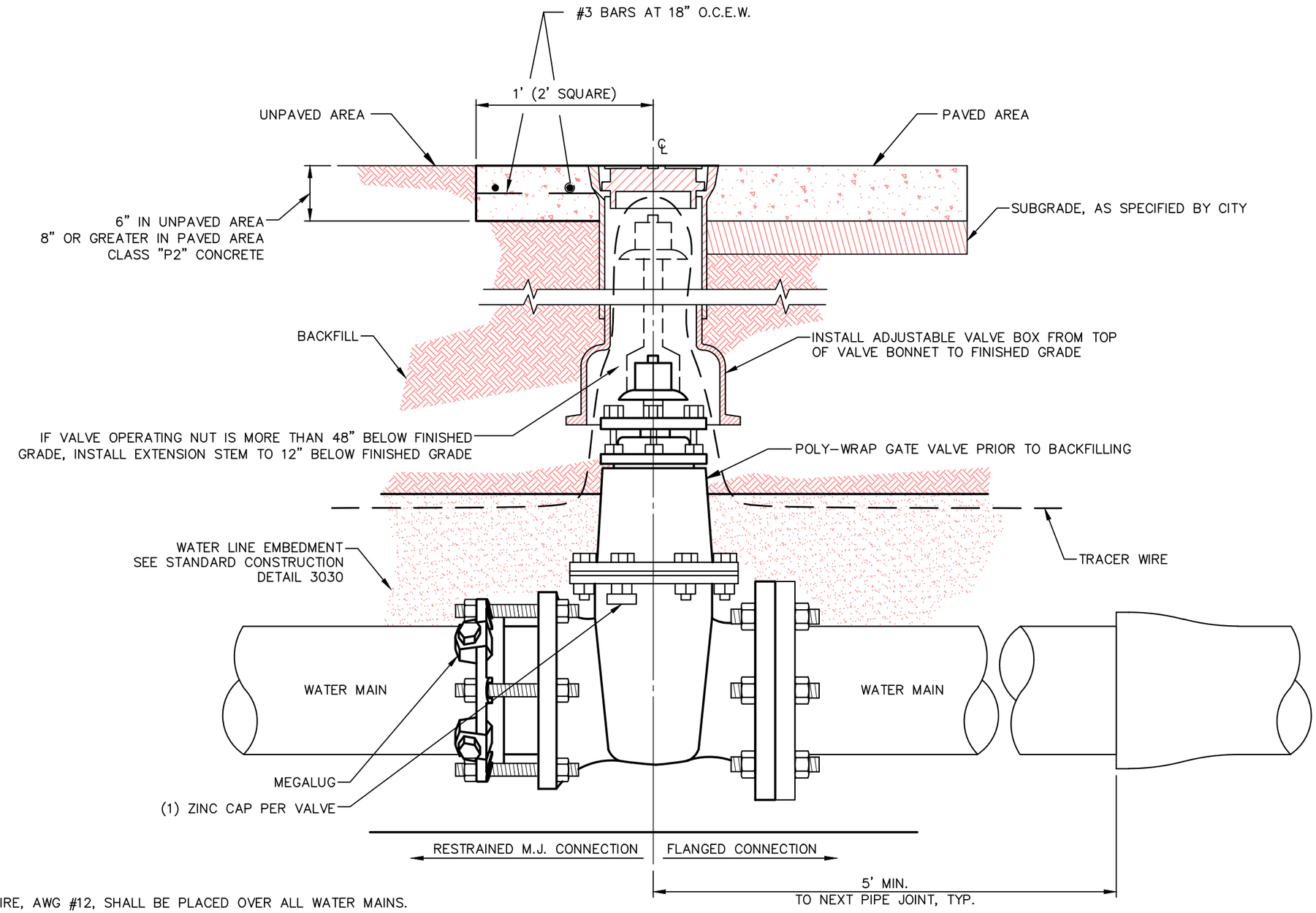

NOTES:

1. BLUE TRACER WIRE, AWG #12, SHALL BE PLACED OVER ALL WATER MAINS.
2. IDENTIFY VALVE LOCATION PER STANDARD CONSTRUCTION DETAIL 4220.

North Central Texas Council of Governments

NOTE: STANDARDS ARE ADOPTED FROM THE NCTOG STANDARD DRAWINGS DATED NOV. '96, WITH LOCAL EXCEPTIONS.

GATE VALVE, VALVE BOX AND EXTENSION STEM

N.T.S.

NO.	LOCAL EXCEPTION	BY	DATE
1	CHANGED SIZE TO "16" AND SMALLER".	SWL	JUL. '14

THE CITY OF COPPELL TEXAS 1890

STANDARD CONSTRUCTION DETAILS

VERTICAL GATE VALVE - 16" AND SMALLER INSTALLATION 1

CITY OF COPPELL DALLAS COUNTY, TEXAS

STD. SPEC. REFERENCE 303., 502.

STANDARD DETAIL 4050

PATH: S:\Standard_Details\New_Dets_modified\SDCoppell2005.dwg

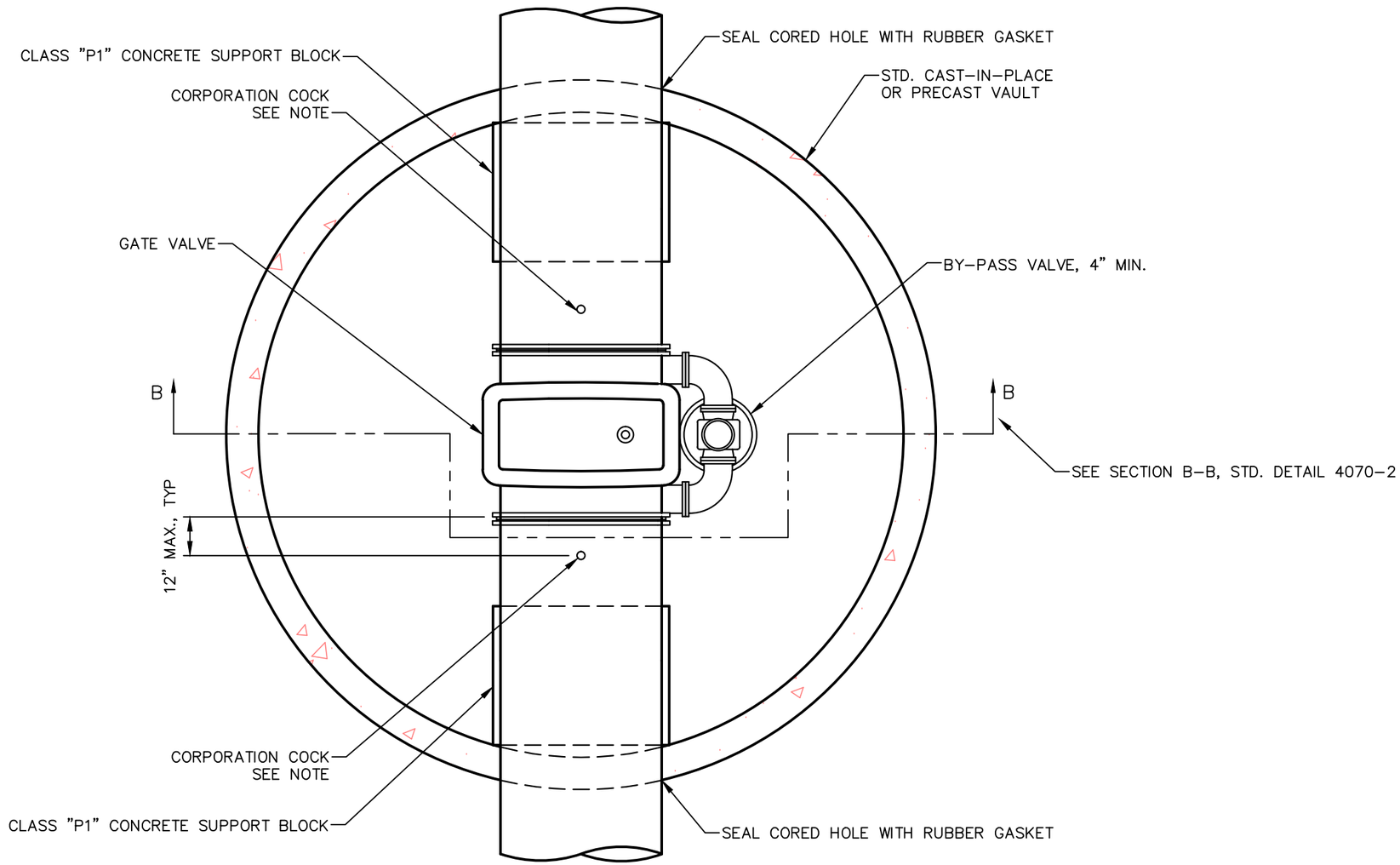

PLAN VIEW

(CONE AND MANHOLE COVER REMOVED FOR CLARITY)
N.T.S.

NOTES:

1. PROVIDE CORPORATION COCK AND CURB STOPS A MAXIMUM OF 12" FROM EACH END OF GATE VALVE, AS SHOWN. CORPORATION AND CURB STOP SIZES SHALL BE 1" FOR 16", 20", AND 24" NOMINAL PIPE DIAMETERS; 2" FOR 30" AND LARGER DIAMETERS. 2" TAPS SHALL BE MADE AS A 2" FLANGED OUTLET WITH INSULATED ADAPTER KIT. COPPER RISERS SHALL BE PROVIDED BETWEEN THE CORPORATION AND CURB STOPS. CURB STOPS SHALL BE INSTALLED AT AN ELEVATION 12" ABOVE THE TOP SURFACE OF MANHOLE BOTTOM.

2. IDENTIFY VALVE LOCATION PER STANDARD CONSTRUCTION DETAIL 4220.

North Central Texas Council of Governments

NOTE: STANDARDS ARE ADOPTED FROM THE NCTOG STANDARD DRAWINGS DATED NOV. '96, WITH LOCAL EXCEPTIONS.

NO.	LOCAL EXCEPTION	BY	DATE
1	CHANGED SIZE TO "LARGER THAN 16".	SWL	JUL. '14

THE CITY OF COPPELL TEXAS 1890

STANDARD CONSTRUCTION DETAILS

VAULT CONSTRUCTION

VERTICAL GATE VALVE LARGER THAN 16" 1

CITY OF COPPELL DALLAS COUNTY, TEXAS

STD. SPEC. REFERENCE 502.

STANDARD DETAIL 4070-1

PATH: S:\Standard_Details\New_Dets_modified\SDCoppell2005.dwg

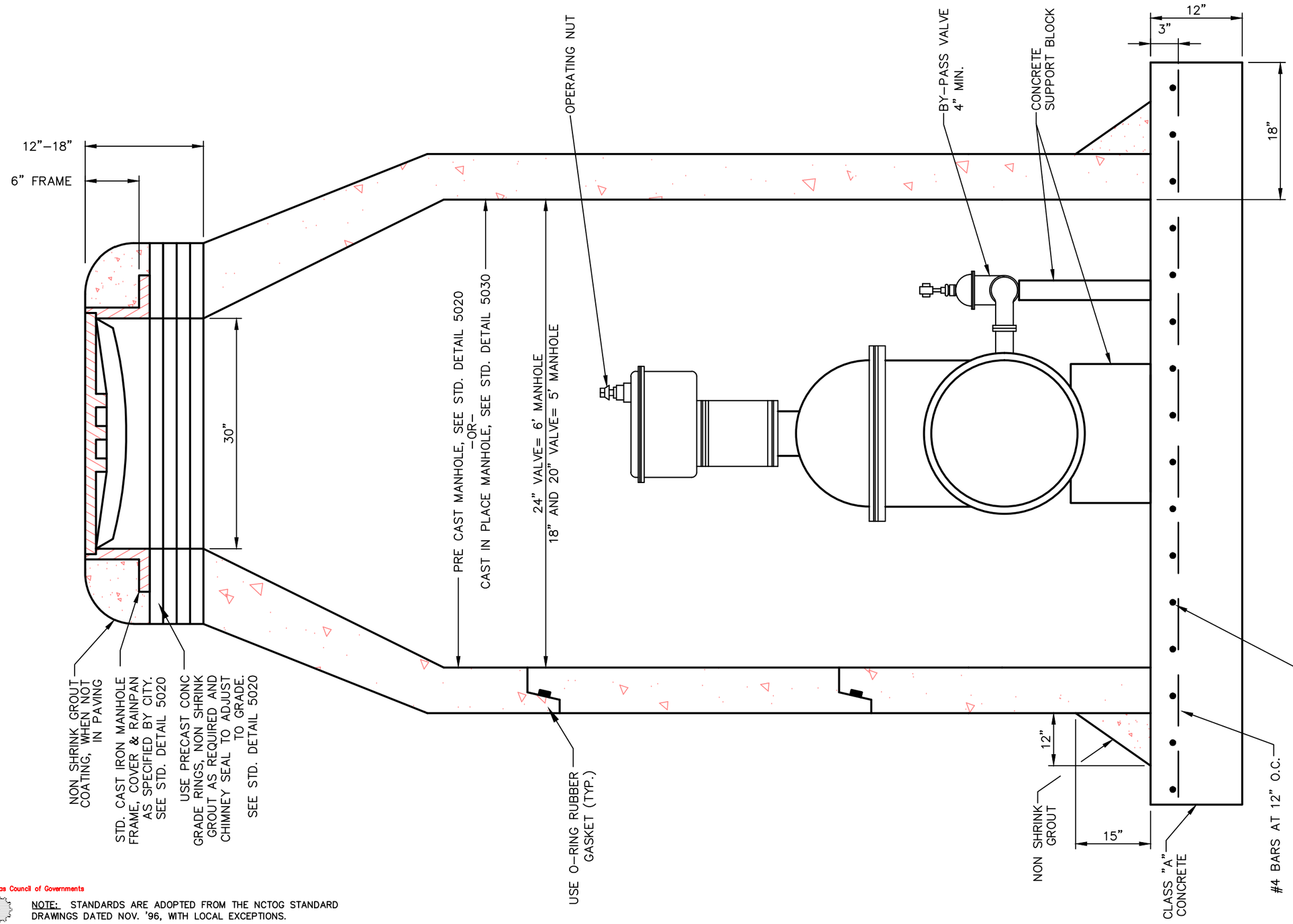

SECTION B–B

N.T.S.

NOTE: IDENTIFY VALVE LOCATION PER STANDARD CONSTRUCTION DETAIL 4220

North Central Texas Council of Governments

NOTE: STANDARDS ARE ADOPTED FROM THE NCTOG STANDARD DRAWINGS DATED NOV. '96, WITH LOCAL EXCEPTIONS.

NO.	LOCAL EXCEPTION	BY	DATE
1	CHANGED SIZE TO "LARGER THAN 16".	SWL	JUL. '14

THE CITY OF COPPELL TEXAS 1890

STANDARD CONSTRUCTION DETAILS

VAULT CONSTRUCTION

VERTICAL GATE VALVE LARGER THAN 16" 1

CITY OF COPPELL DALLAS COUNTY, TEXAS

STD. SPEC. REFERENCE 303., 502.

STANDARD DETAIL 4070-2

PATH: S:\Standard_Details\New_Dets_modified\SDCoppell2005.dwg

AIR VALVE	BRASS WHEEL VALVE	VENT PIPE
2"	2"	2"

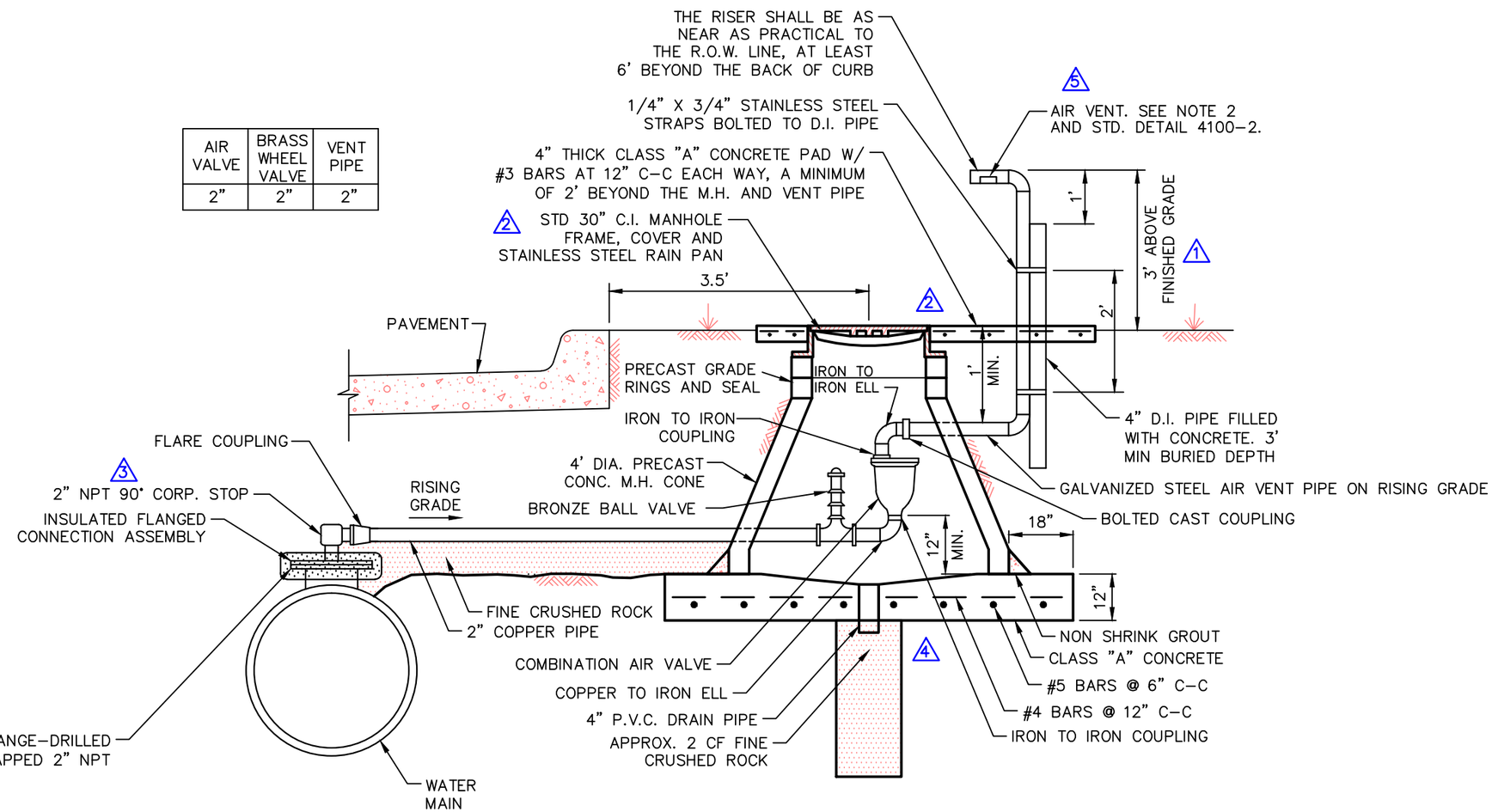

TYPE 1 AIR RELEASE VALVE

N.T.S.

NOTES:

1. IDENTIFY VALVE LOCATION PER STANDARD CONSTRUCTION DETAIL 4220.
2. CONSTRUCT VENT AS DIRECTED BY CITY.

North Central Texas Council of Governments

NOTE: STANDARDS ARE ADOPTED FROM THE NCTOG STANDARD DRAWINGS DATED NOV. '96, WITH LOCAL EXCEPTIONS.

NO.	LOCAL EXCEPTION	BY	DATE
5	ADD NOTE 2.	SWL	JUL. '14
4	ADD CONCRETE FOUNDATION AND DRAIN.	SWL	JUL. '14
3	CHANGED STRAIGHT CORP. STOP TO A 90° CORP. STOP.	SWL	JUL. '14
2	ADD CONCRETE PAD AND CHANGE MH COVER FROM 24" TO 30".	SWL	JUL. '14
1	CHANGED DISTANCE TO 3' ABOVE FINISHED GRADE.	SWL	JUL. '14

THE CITY OF COPPELL TEXAS 1840

STANDARD CONSTRUCTION DETAILS

AIR RELEASE VALVE - 2"

TYPE 1

CITY OF COPPELL DALLAS COUNTY, TEXAS

STD. SPEC. REFERENCE 303., 501., 502.

STANDARD DETAIL 4090

PATH: S:\Standard_Details\New_Dets_modified\SDCoppell2005.dwg

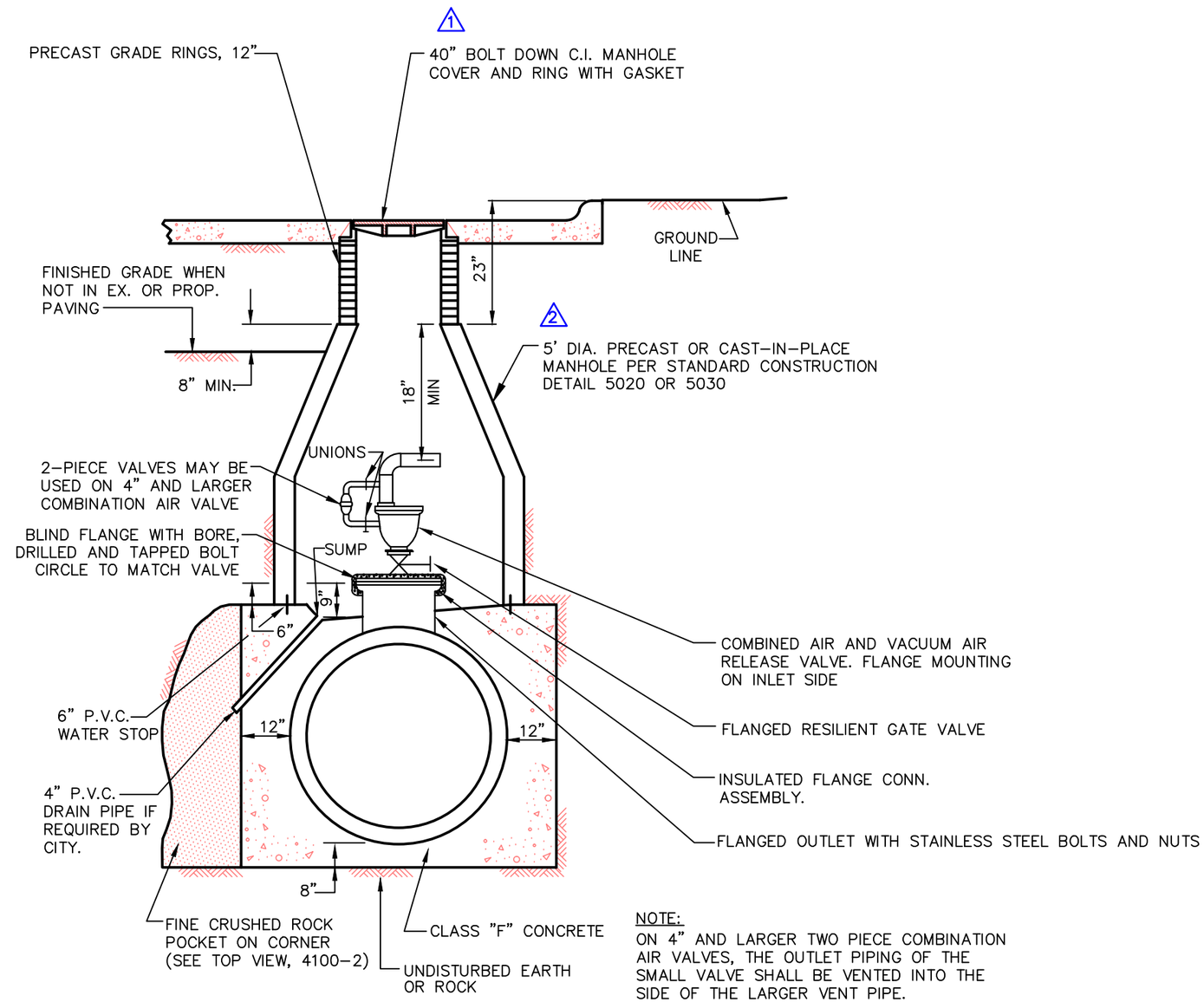

NOTE: IDENTIFY VALVE LOCATION PER STANDARD CONSTRUCTION DETAIL 4220

NOTE:
WHEN NOT IN PAVING OR WALK, A CONCRETE PAD REINFORCED W/ #3 BARS AT 12" C-C EACH WAY, SHALL EXTEND A MINIMUM OF 24" AROUND THE MANHOLE, AND SHALL BE A MINIMUM OF 4" THICK.

NOTE:
ON 4" AND LARGER TWO PIECE COMBINATION AIR VALVES, THE OUTLET PIPING OF THE SMALL VALVE SHALL BE VENTED INTO THE SIDE OF THE LARGER VENT PIPE.

TYPE 2 AIR VALVE

N.T.S.

North Central Texas Council of Governments

NOTE: STANDARDS ARE ADOPTED FROM THE NCTOG STANDARD DRAWINGS DATED NOV. '96, WITH LOCAL EXCEPTIONS.

NO.	LOCAL EXCEPTION	BY	DATE
3	ADD "4" AND LARGER".	SWL	JUL. '14
2	ADD MH CONE SECTION.	SWL	JUL. '14
1	CHANGE TO BOLTED AND GASKETED MH COVER.	SWL	JUL. '14

THE CITY OF COPPELL TEXAS 1890

STANDARD CONSTRUCTION DETAILS

AIR RELEASE VALVE - 4" AND LARGER 3

TYPE 2

CITY OF COPPELL DALLAS COUNTY, TEXAS

STD. SPEC. REFERENCE 702., 501., 502.

STANDARD DETAIL 4100-1

PATH: S:\Standard_Details\New_Dets_modified\SDCoppell2005.dwg

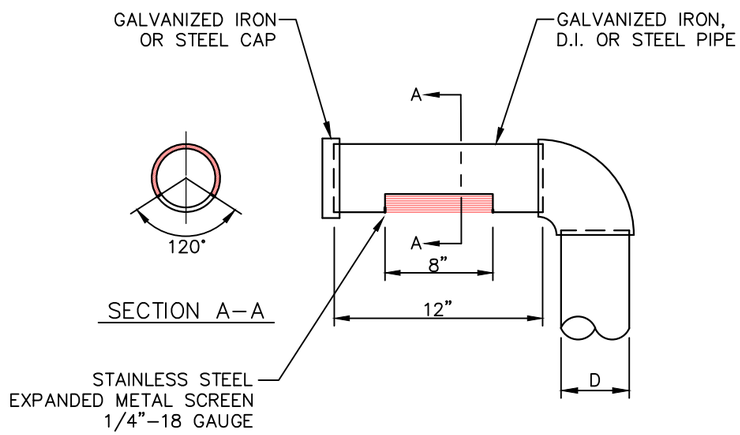

AIR VENT

N.T.S.

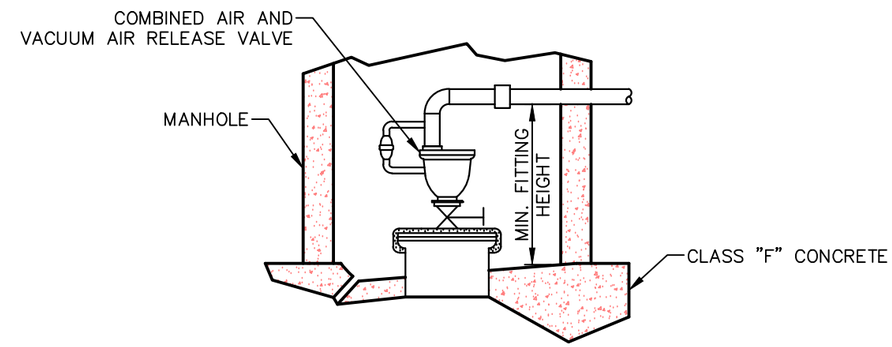

FITTING HEIGHT DETAIL

N.T.S.

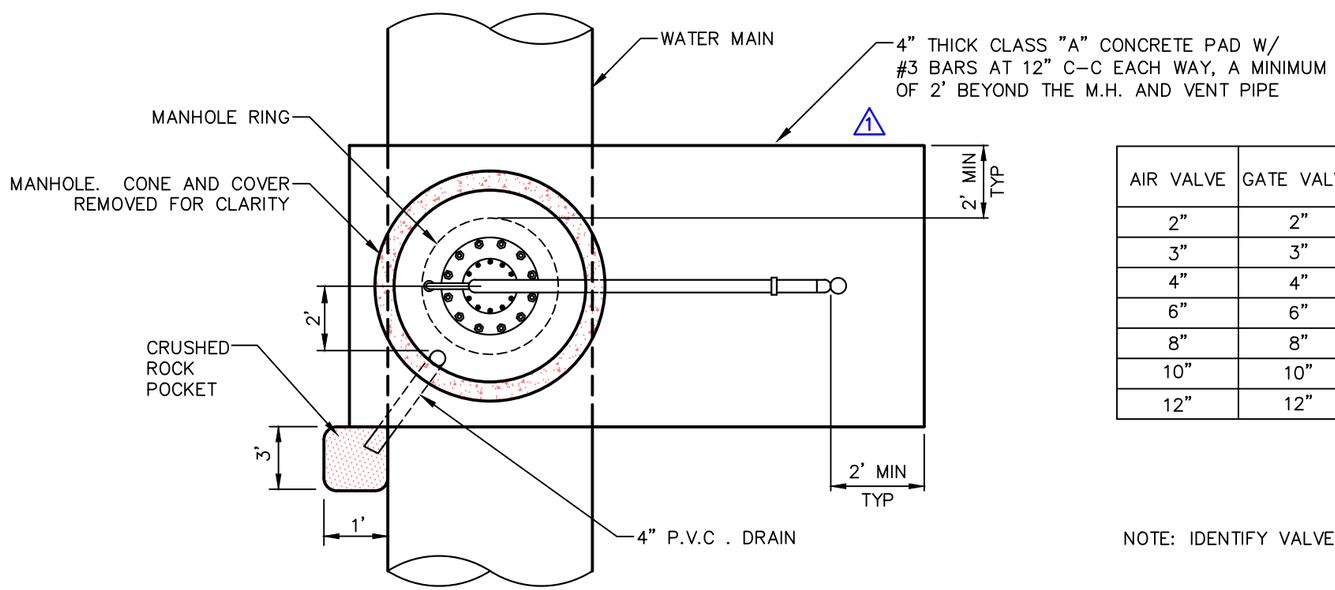

PLAN VIEW

N.T.S.

AIR VALVE	GATE VALVE	FLG. OUTLET	MIN. FITTING HEIGHT	VENT PIPE D	M.H. DIA.
2"	2"	8"	26"	2"	5'
3"	3"	18"	31"	3"	5'
4"	4"	18"	38"	4"	5'
6"	6"	18"	46"	6"	5'
8"	8"	18"	53"	8"	6'
10"	10"	20"	62"	10"	6'
12"	12"	24"	72"	12"	6'

NOTE: IDENTIFY VALVE LOCATION PER STANDARD CONSTRUCTION DETAIL 4220

North Central Texas Council of Governments

NOTE: STANDARDS ARE ADOPTED FROM THE NCTOG STANDARD DRAWINGS DATED NOV. '96, WITH LOCAL EXCEPTIONS.

NO.	LOCAL EXCEPTION	BY	DATE
1	ADD CONCRETE PAD.	SWL	JUL. '14

THE CITY OF COPPELL TEXAS 1890

STANDARD CONSTRUCTION DETAILS

AIR RELEASE VALVE DETAILS

CITY OF COPPELL DALLAS COUNTY, TEXAS

STD. SPEC. REFERENCE 303., 501., 502.

STANDARD DETAIL 4100-2

PATH: S:\Standard_Details\New_Dets_modified\SDCoppell2005.dwg

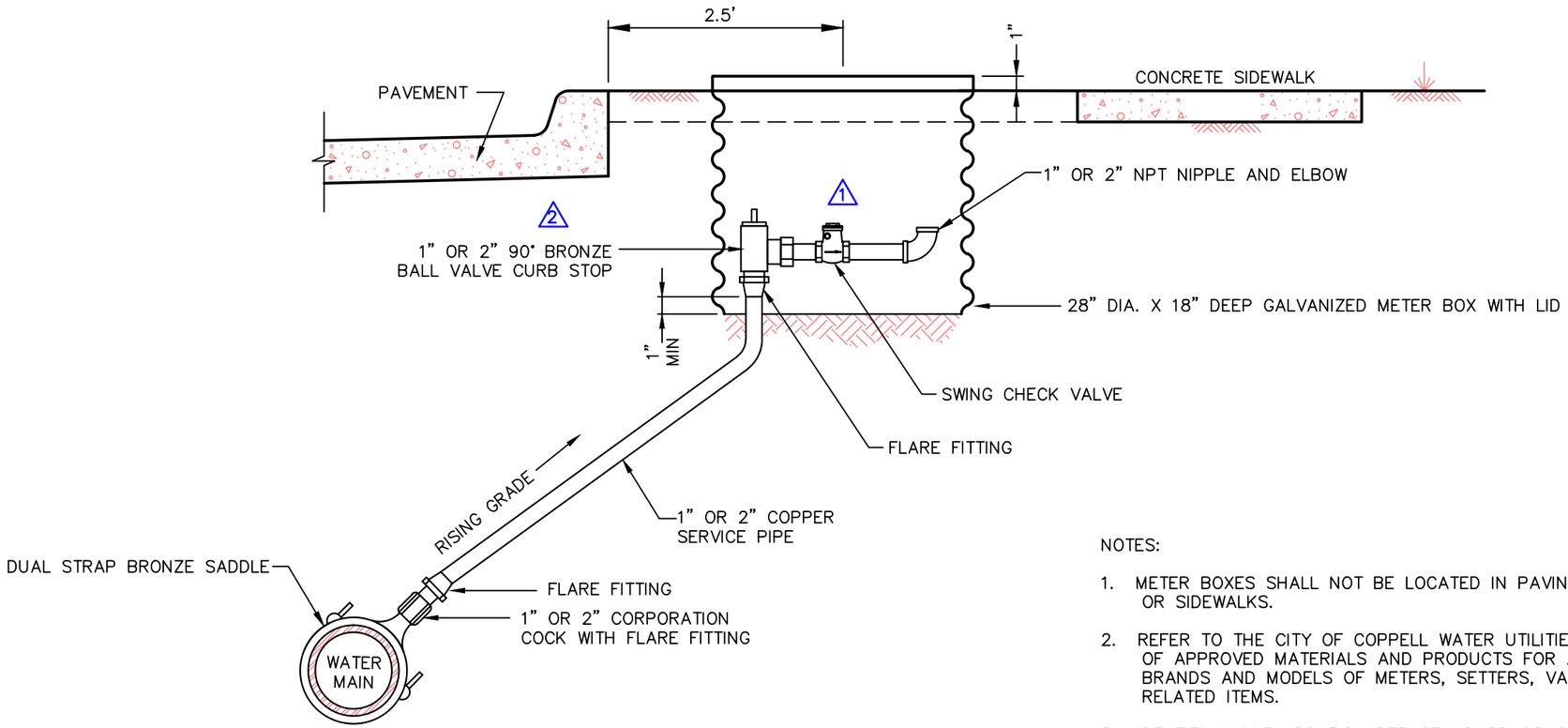

TYPE 1 BLOW OFF VALVE

(SIZE DESIGNATED ON PLANS)
N.T.S.

NOTES:

1. METER BOXES SHALL NOT BE LOCATED IN PAVING OR SIDEWALKS.
2. REFER TO THE CITY OF COPPELL WATER UTILITIES LIST OF APPROVED MATERIALS AND PRODUCTS FOR APPROVED BRANDS AND MODELS OF METERS, SETTERS, VALVES AND RELATED ITEMS.
3. IDENTIFY VALVE LOCATION PER STANDARD CONSTRUCTION DETAIL 4220.

North Central Texas Council of Governments

NOTE: STANDARDS ARE ADOPTED FROM THE NCTOG STANDARD DRAWINGS DATED NOV. '96, WITH LOCAL EXCEPTIONS.

NO.	LOCAL EXCEPTION	BY	DATE
2	CHANGE FROM BALL VALVE TO 90° ANGLE BALL VALVE.	SWL	JUL. '14
1	ADD SWING CHECK VALVE.	SWL	JUL. '14

THE CITY OF COPPELL TEXAS 1890

STANDARD CONSTRUCTION DETAILS

BLOW OFF VALVE INSTALLATION
TYPE 1

CITY OF COPPELL DALLAS COUNTY, TEXAS

STD. SPEC. REFERENCE
501., 502.

STANDARD DETAIL
4110

PATH: S:\Standard_Details\New_Dets_modified\SDCoppell2005.dwg

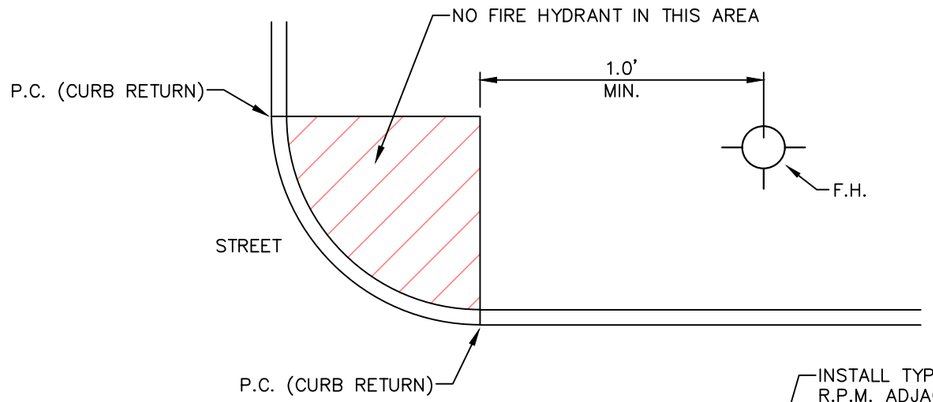

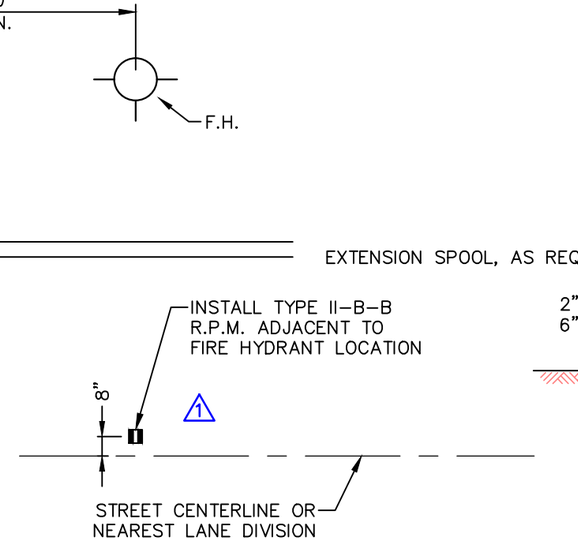

PLAN VIEW
N.T.S.

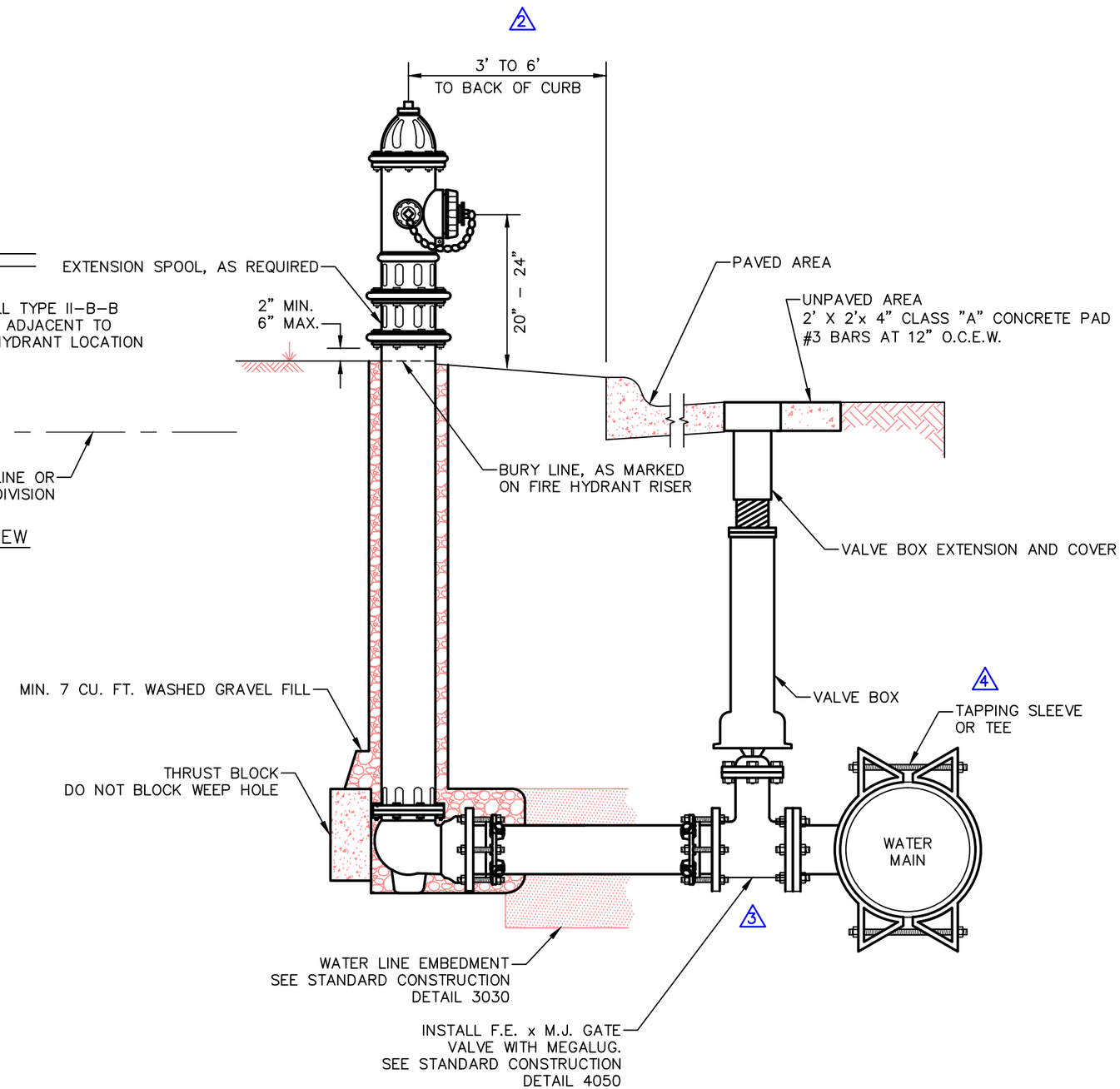

NOTES:

1. IN GENERAL, ALL FIRE HYDRANTS SHALL CONFORM TO AWWA STANDARD SPECIFICATIONS FOR FIRE HYDRANTS FOR ORDINARY WATER WORKS SERVICE, C-502. FIRE HYDRANTS SHALL HAVE A 5 1/4" MIN. VALVE OPENING AND A BARREL APPROXIMATELY 7" INSIDE DIAMETER. ALL HYDRANTS SHALL BE EQUIPPED WITH A BREAKAWAY FLANGE.
2. ALL JOINTS SHALL BE MEGALUG JOINTS.
3. TYPICAL VALVE: ACTUAL VALVE LOCATION WILL DEPEND ON LOCATION OF WATER MAIN.
4. F.H. NO CLOSER THAN 18" TO EXISTING OR PROPOSED SIDEWALKS.
5. STANDARD BURY DEPTH 5' FEET
6. SET FIRE HYDRANT ON THE LOT LINE EXTENDED WHEN POSSIBLE.
7. F.H. SHALL BE LOCATED MINIMUM 1 FT. OUTSIDE OF THE AREA BETWEEN THE P.C.'S (CURB RETURN) OF THE CORNER TURNING RADII AT INTERSECTIONS. SEE PLAN VIEW ABOVE.
8. IDENTIFY VALVE LOCATION PER STANDARD CONSTRUCTION DETAIL 4220.
9. PAINT HYDRANT WITH TWO COATS SHERWIN WILLIAMS ALKYD INDUSTRIAL GLOSS ENAMEL AS FOLLOWS.
   PUBLIC HYDRANTS: B54Y37 YELLOW.
   PRIVATE HYDRANTS: B54R38 RED
10. REFER TO THE CITY OF COPPELL WATER UTILITIES LIST OF APPROVED MATERIALS AND PRODUCTS FOR APPROVED BRANDS AND MODELS OF HYDRANTS, GATE VALVES AND RELATED ITEMS.

North Central Texas Council of Governments

NOTE: STANDARDS ARE ADOPTED FROM THE NCTOG STANDARD DRAWINGS DATED NOV. '96, WITH LOCAL EXCEPTIONS.

NO.	LOCAL EXCEPTION	BY	DATE
4	ADD "OR TEE" TO CALLOUT.	SWL	JUL. '14
3	DELETE F.E. TO M.J. ADAPTER, SPECIFY F.E. TO M.J. VALVE.	SWL	JUL. '14
2	CLARIFY DISTANCE TO BACK OF CURB.	SWL	JUL. '14
1	ADD A TYPE-II-B-B RAISED PAVEMENT MARKER AT FIRE HYDRANT.	SWL	JUL. '14

THE CITY OF COPPELL TEXAS 1890

STANDARD CONSTRUCTION DETAILS

FIRE HYDRANT INSTALLATION

CITY OF COPPELL DALLAS COUNTY, TEXAS

STD. SPEC. REFERENCE
303., 501., 502.

STANDARD DETAIL
4120

PATH: S:\Standard_Details\New_Dets_modified\SDCoppell2005.dwg

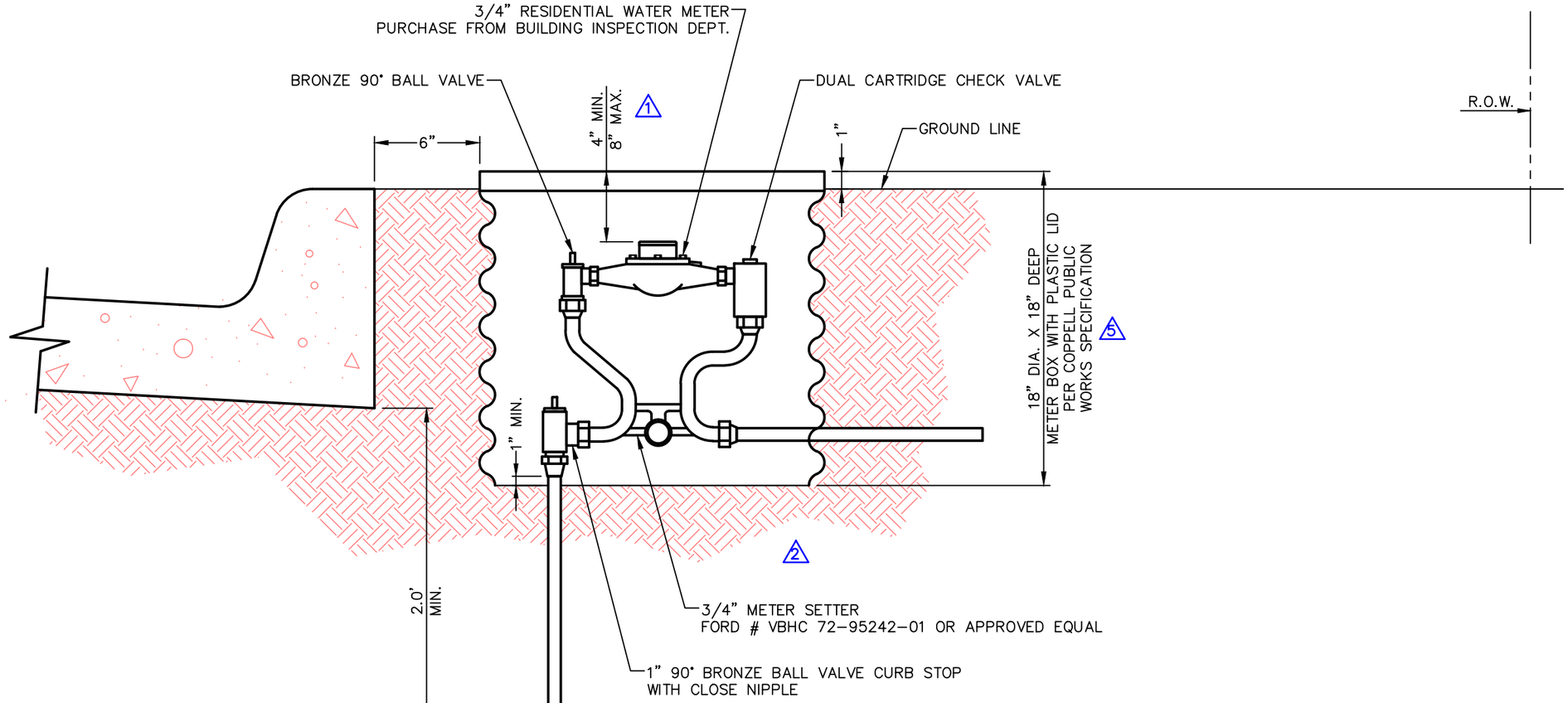

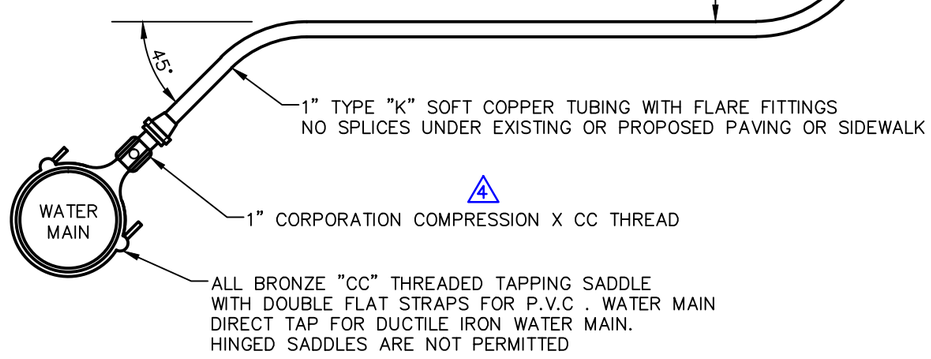

NOTES:

1. METER BOXES SHALL NOT BE LOCATED IN PAVING OR SIDEWALKS.
2. REFER TO THE CITY OF COPPELL WATER UTILITIES LIST OF APPROVED MATERIALS AND PRODUCTS FOR APPROVED BRANDS AND MODELS OF METERS, SETTERS, VALVES AND RELATED ITEMS.
3. IDENTIFY VALVE LOCATION PER STANDARD CONSTRUCTION DETAIL 4220.
4. NO SEALING COMPOUND OR TAPE SHALL BE USED ON SETTER OR METER THREADS.
5. (4) ALL CONNECTIONS SHALL BE THREADED, FLANGED, FLARED OR COMPRESSION. SOLDERED JOINTS ARE NOT PERMITTED.
6. MATERIALS OTHER THAN BRONZE, BRASS OR COPPER SHALL NOT BE PERMITTED.

North Central Texas Council of Governments

NOTE: STANDARDS ARE ADOPTED FROM THE NCTOG STANDARD DRAWINGS DATED NOV. '96, WITH LOCAL EXCEPTIONS.

NO.	LOCAL EXCEPTION	BY	DATE
5	ADD REQUIREMENT FOR PLASTIC LID.	SWL	JUL. '14
4	CHANGED CALLOUT AND NOTE TO ALLOW COMPRESSION FITTINGS.	SWL	JUL. '14
3	CHANGED "DOMESTIC" TO "RESIDENTIAL DOMESTIC".	SWL	JUL. '14
2	DELETE REQUIREMENT FOR CRUSHED STONE EMBEDMENT UNDER METER CANS.	SWL	JUL. '14
1	CHANGED DIMENSION FROM 8.0".	SWL	JUL. '14

THE CITY OF COPPELL TEXAS 1890

STANDARD CONSTRUCTION DETAILS

WATER SERVICE INSTALLATION - RESIDENTIAL

3 DOMESTIC, 3/4" METER

CITY OF COPPELL DALLAS COUNTY, TEXAS

STD. SPEC. REFERENCE 501., 502., 504.

STANDARD DETAIL 4130

PATH: S:\Standard_Details\New_Dets_modified\SDCoppell2005.dwg

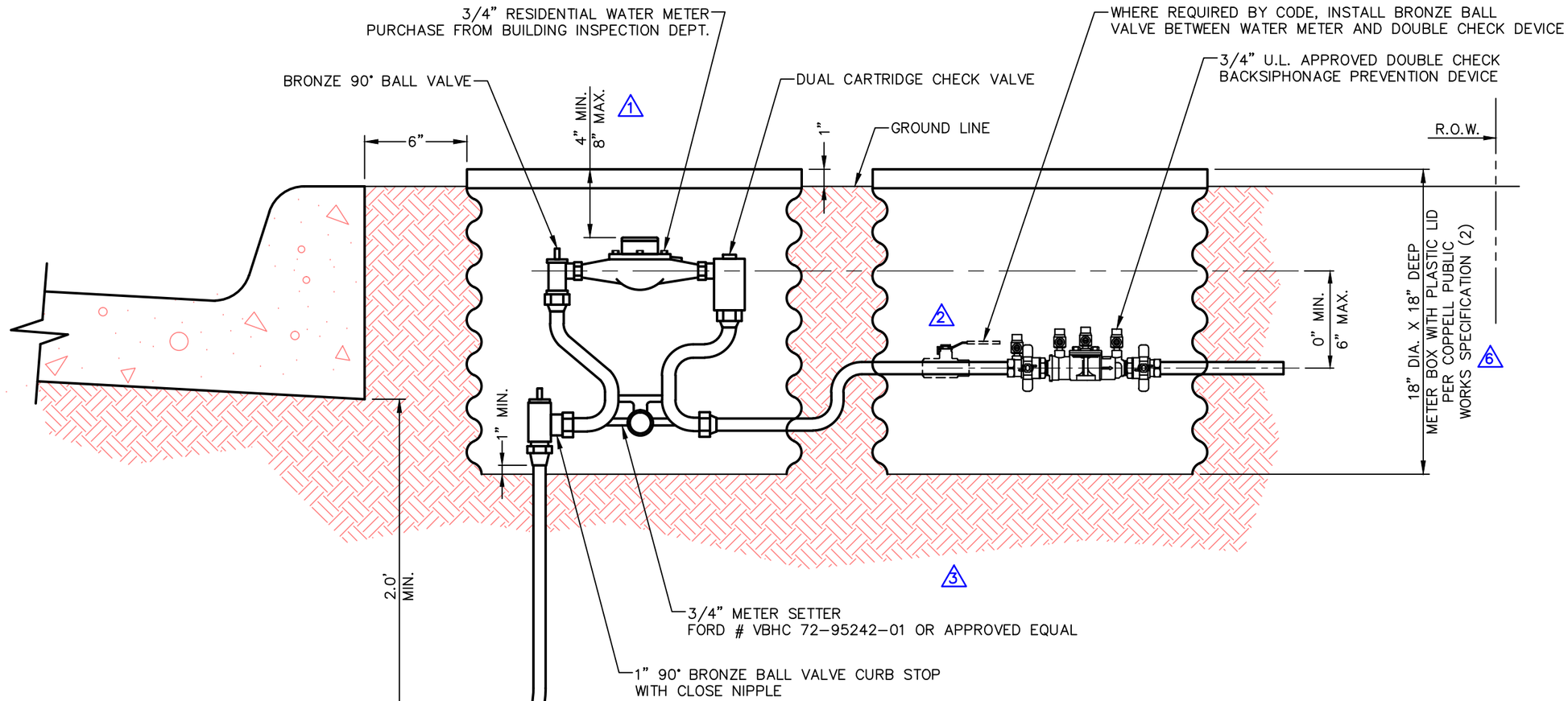

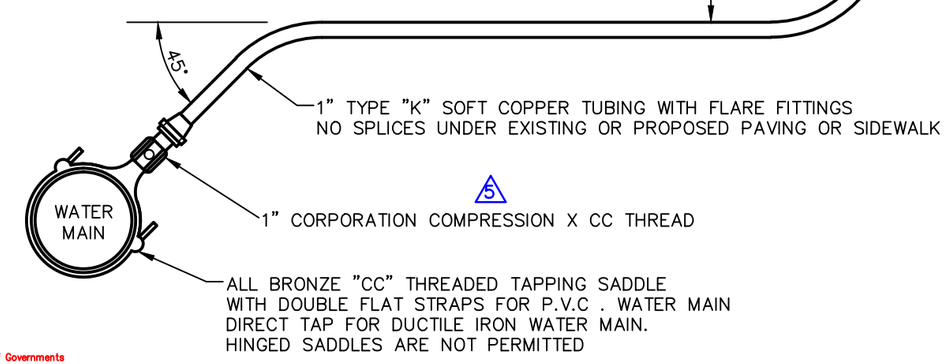

NOTES:

1. METER BOXES SHALL NOT BE LOCATED IN PAVING OR SIDEWALKS.
2. REFER TO THE CITY OF COPPELL WATER UTILITIES LIST OF APPROVED MATERIALS AND PRODUCTS FOR APPROVED BRANDS AND MODELS OF METERS, SETTERS, VALVES AND RELATED ITEMS.
3. IDENTIFY VALVE LOCATION PER STANDARD CONSTRUCTION DETAIL 4220.
4. NO SEALING COMPOUND OR TAPE SHALL BE USED ON SETTER OR METER THREADS.
5. ALL CONNECTIONS SHALL BE THREADED, FLANGED, FLARED OR COMPRESSION. SOLDERED JOINTS ARE NOT PERMITTED.
6. MATERIALS OTHER THAN BRONZE, BRASS OR COPPER SHALL NOT BE PERMITTED.

North Central Texas Council of Governments

NOTE: STANDARDS ARE ADOPTED FROM THE NCTOG STANDARD DRAWINGS DATED NOV. '96, WITH LOCAL EXCEPTIONS.

NO.	LOCAL EXCEPTION	BY	DATE
6	ADD REQUIREMENT FOR PLASTIC LID.	SWL	JUL. '14
5	CHANGED CALLOUT AND NOTE TO ALLOW COMPRESSION FITTINGS.	SWL	JUL. '14
4	CHANGED "IRRIGATION" TO "IRRIGATION OR COMMERCIAL DOMESTIC".	SWL	JUL. '14
3	DELETE REQUIREMENT FOR CRUSHED STONE EMBEDMENT UNDER METER CANS.	SWL	JUL. '14
1 2	CHANGED DIMENSION FROM 8.0"1, ADD BRONZE BALL VALVE2.	SWL	JUL. '14

THE CITY OF COPPELL TEXAS 1890

STANDARD CONSTRUCTION DETAILS

WATER SERVICE INSTALLATION - IRRIGATION OR 4 COMMERCIAL DOMESTIC, 3/4" METER

CITY OF COPPELL DALLAS COUNTY, TEXAS

STD. SPEC. REFERENCE 501., 502., 504.

STANDARD DETAIL 4135

PATH: S:\Standard_Details\New_Dets_modified\SDCoppell2005.dwg

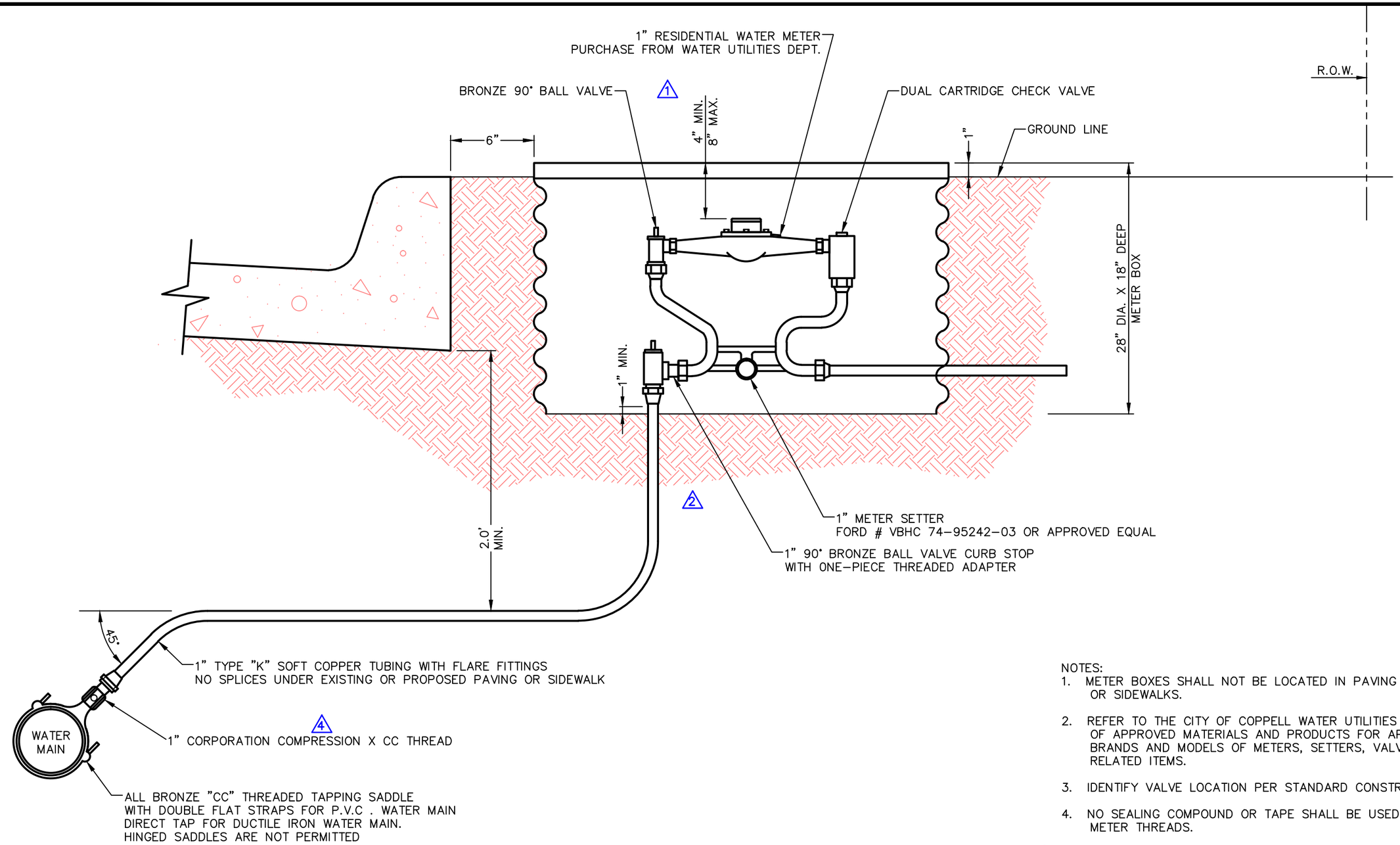

NOTES:

1. METER BOXES SHALL NOT BE LOCATED IN PAVING OR SIDEWALKS.
2. REFER TO THE CITY OF COPPELL WATER UTILITIES LIST OF APPROVED MATERIALS AND PRODUCTS FOR APPROVED BRANDS AND MODELS OF METERS, SETTERS, VALVES AND RELATED ITEMS.
3. IDENTIFY VALVE LOCATION PER STANDARD CONSTRUCTION DETAIL 4220.
4. NO SEALING COMPOUND OR TAPE SHALL BE USED ON SETTER OR METER THREADS.
5. (4) ALL CONNECTIONS SHALL BE THREADED, FLANGED, FLARED OR COMPRESSION. SOLDERED JOINTS ARE NOT PERMITTED.
6. MATERIALS OTHER THAN BRONZE, BRASS OR COPPER SHALL NOT BE PERMITTED.

North Central Texas Council of Governments

NOTE: STANDARDS ARE ADOPTED FROM THE NCTOG STANDARD DRAWINGS DATED NOV. '96, WITH LOCAL EXCEPTIONS.

NO.	LOCAL EXCEPTION	BY	DATE
4	CHANGED CALLOUT AND NOTE TO ALLOW COMPRESSION FITTINGS.	SWL	JUL. '14
3	CHANGED "DOMESTIC" TO "RESIDENTIAL DOMESTIC".	SWL	JUL. '14
2	DELETE REQUIREMENT FOR CRUSHED STONE EMBEDMENT UNDER METER CANS.	SWL	JUL. '14
1	CHANGED DIMENSION FROM 8.0".	SWL	JUL. '14

THE CITY OF COPPELL TEXAS 1890

STANDARD CONSTRUCTION DETAILS

WATER SERVICE INSTALLATION - RESIDENTIAL

3 DOMESTIC, 1" METER

CITY OF COPPELL DALLAS COUNTY, TEXAS

STD. SPEC. REFERENCE 501., 502., 504.

STANDARD DETAIL 4140

PATH: S:\Standard_Details\New_Dets_modified\SDCoppell2005.dwg

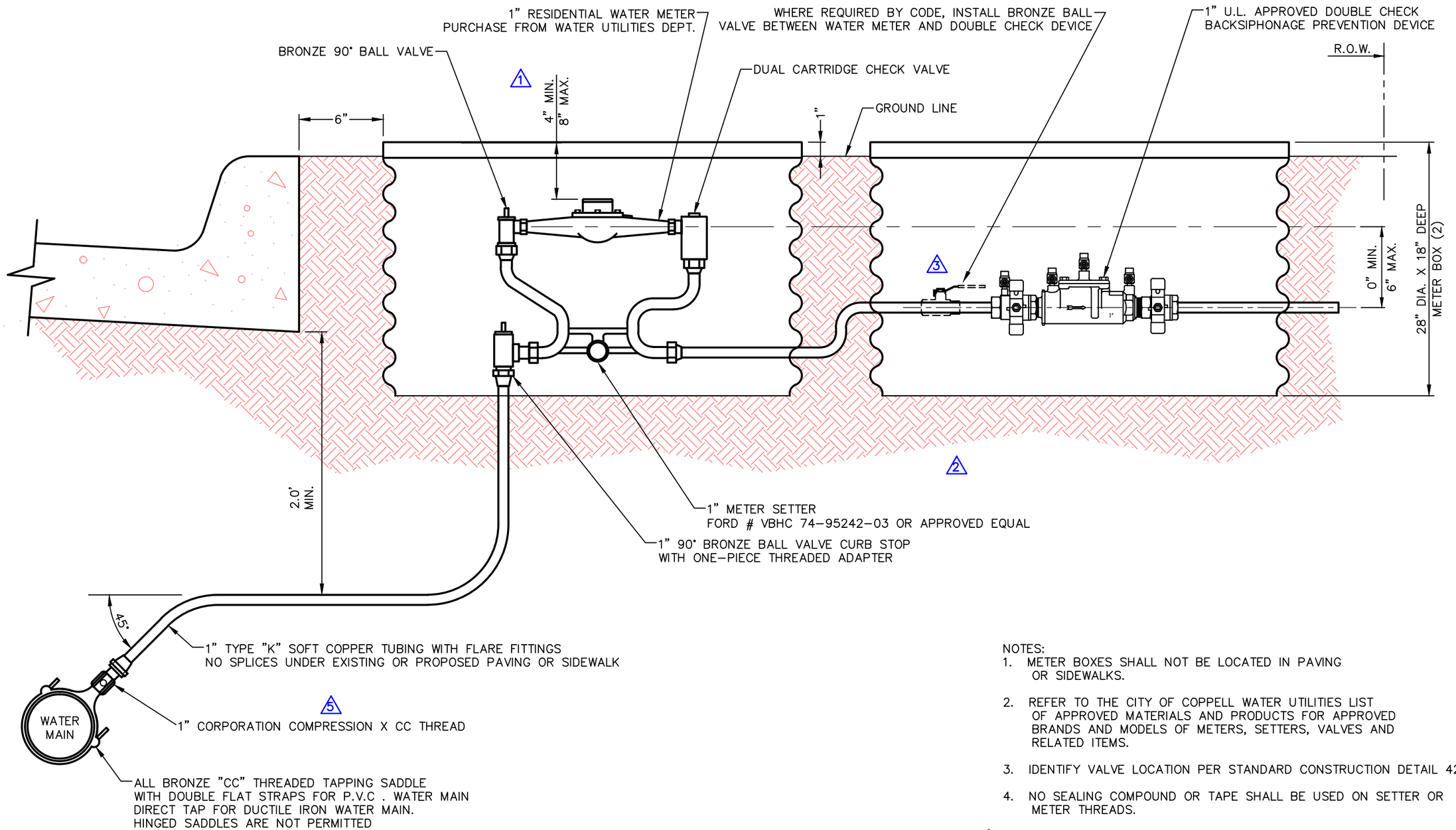

NOTES:

1. METER BOXES SHALL NOT BE LOCATED IN PAVING OR SIDEWALKS.
2. REFER TO THE CITY OF COPPELL WATER UTILITIES LIST OF APPROVED MATERIALS AND PRODUCTS FOR APPROVED BRANDS AND MODELS OF METERS, SETTERS, VALVES AND RELATED ITEMS.
3. IDENTIFY VALVE LOCATION PER STANDARD CONSTRUCTION DETAIL 4220.
4. NO SEALING COMPOUND OR TAPE SHALL BE USED ON SETTER OR METER THREADS.
5. ALL CONNECTIONS SHALL BE THREADED, FLANGED, FLARED OR COMPRESSION. SOLDERED JOINTS ARE NOT PERMITTED. (5)
6. MATERIALS OTHER THAN BRONZE, BRASS OR COPPER SHALL NOT BE PERMITTED.

North Central Texas Council of Governments

NOTE: STANDARDS ARE ADOPTED FROM THE NCTOG STANDARD DRAWINGS DATED NOV. '96, WITH LOCAL EXCEPTIONS.

NO.	LOCAL EXCEPTION	BY	DATE
5	CHANGED CALLOUT AND NOTE TO ALLOW COMPRESSION FITTINGS.	SWL	JUL. '14
4	CHANGED "IRRIGATION" TO "COMMERCIAL OR DOMESTIC IRRIGATION".	SWL	JUL. '14
3	ADD BRONZE BALL VALVE.	SWL	JUL. '14
2	DELETE REQUIREMENT FOR CRUSHED STONE EMBEDMENT UNDER METER CANS.	SWL	JUL. '14
1	CHANGED DIMENSION FROM 8.0".	SWL	JUL. '14

THE CITY OF COPPELL TEXAS 1890

STANDARD CONSTRUCTION DETAILS

WATER SERVICE INSTALLATION - COMMERCIAL (4) OR DOMESTIC IRRIGATION, 1" METER

CITY OF COPPELL DALLAS COUNTY, TEXAS

STD. SPEC. REFERENCE 501., 502., 504.

STANDARD DETAIL 4145

PATH: S:\Standard_Details\New_Dets_modified\SDCoppell2005.dwg

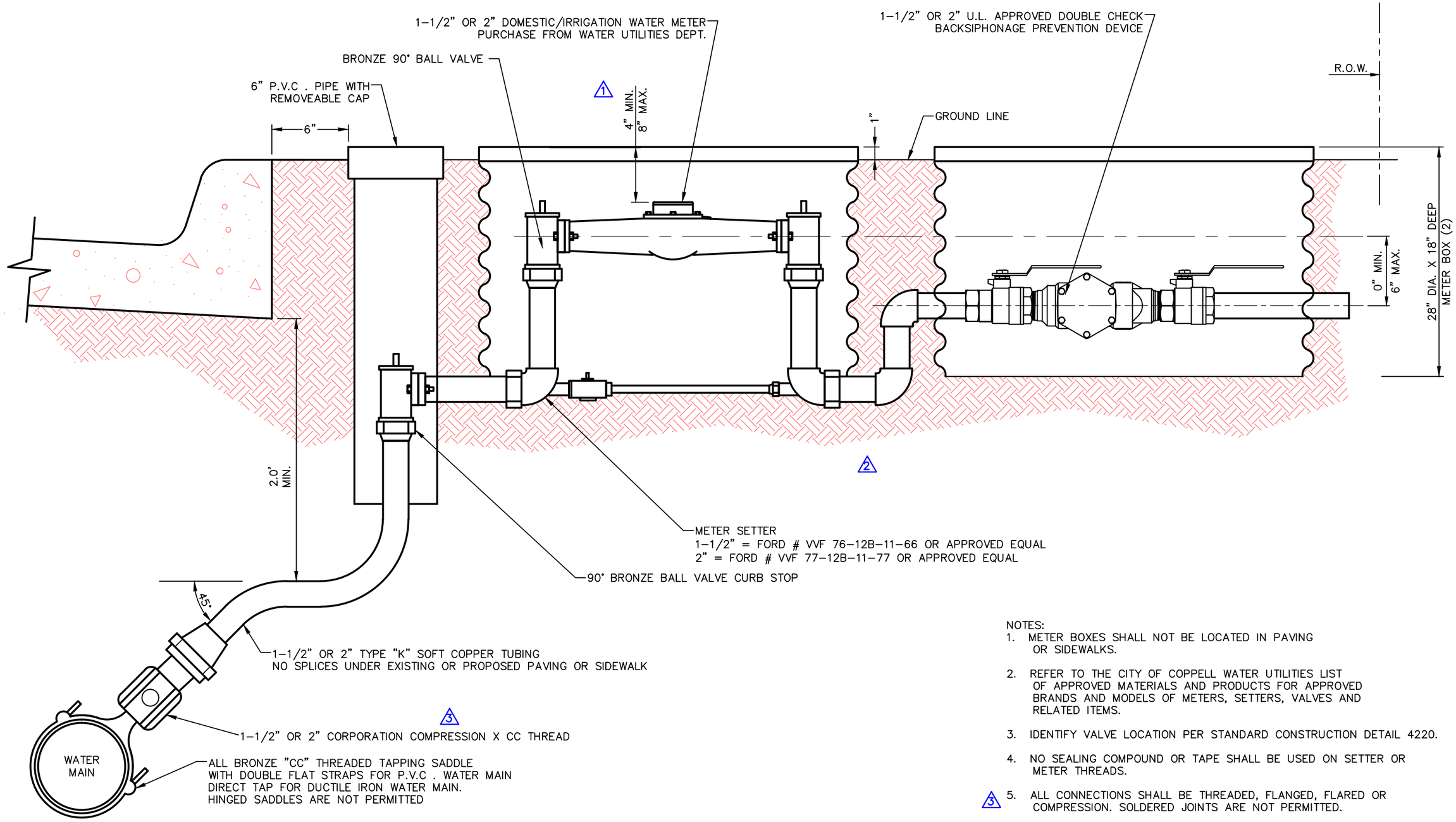

NOTES:

1. METER BOXES SHALL NOT BE LOCATED IN PAVING OR SIDEWALKS.
2. REFER TO THE CITY OF COPPELL WATER UTILITIES LIST OF APPROVED MATERIALS AND PRODUCTS FOR APPROVED BRANDS AND MODELS OF METERS, SETTERS, VALVES AND RELATED ITEMS.
3. IDENTIFY VALVE LOCATION PER STANDARD CONSTRUCTION DETAIL 4220.
4. NO SEALING COMPOUND OR TAPE SHALL BE USED ON SETTER OR METER THREADS.
5. (3) ALL CONNECTIONS SHALL BE THREADED, FLANGED, FLARED OR COMPRESSION. SOLDERED JOINTS ARE NOT PERMITTED.
6. MATERIALS OTHER THAN BRONZE, BRASS OR COPPER SHALL NOT BE PERMITTED.

North Central Texas Council of Governments

NOTE: STANDARDS ARE ADOPTED FROM THE NCTOG STANDARD DRAWINGS DATED NOV. '96, WITH LOCAL EXCEPTIONS.

NO.	LOCAL EXCEPTION	BY	DATE
3	CHANGED CALLOUT AND NOTE TO ALLOW COMPRESSION FITTINGS.	SWL	JUL. '14
2	DELETE REQUIREMENT FOR CRUSHED STONE EMBEDMENT UNDER METER CANS.	SWL	JUL. '14
1	CHANGED DIMENSION FROM 8.0".	SWL	JUL. '14

THE CITY OF COPPELL TEXAS 1890

STANDARD CONSTRUCTION DETAILS

WATER SERVICE INSTALLATION - DOMESTIC
1-1/2" OR 2" METER

CITY OF COPPELL DALLAS COUNTY, TEXAS

STD. SPEC. REFERENCE
501., 502., 504.

STANDARD DETAIL
4150

PATH: S:\Standard_Details\New_Dets_modified\SDCoppell2005.dwg

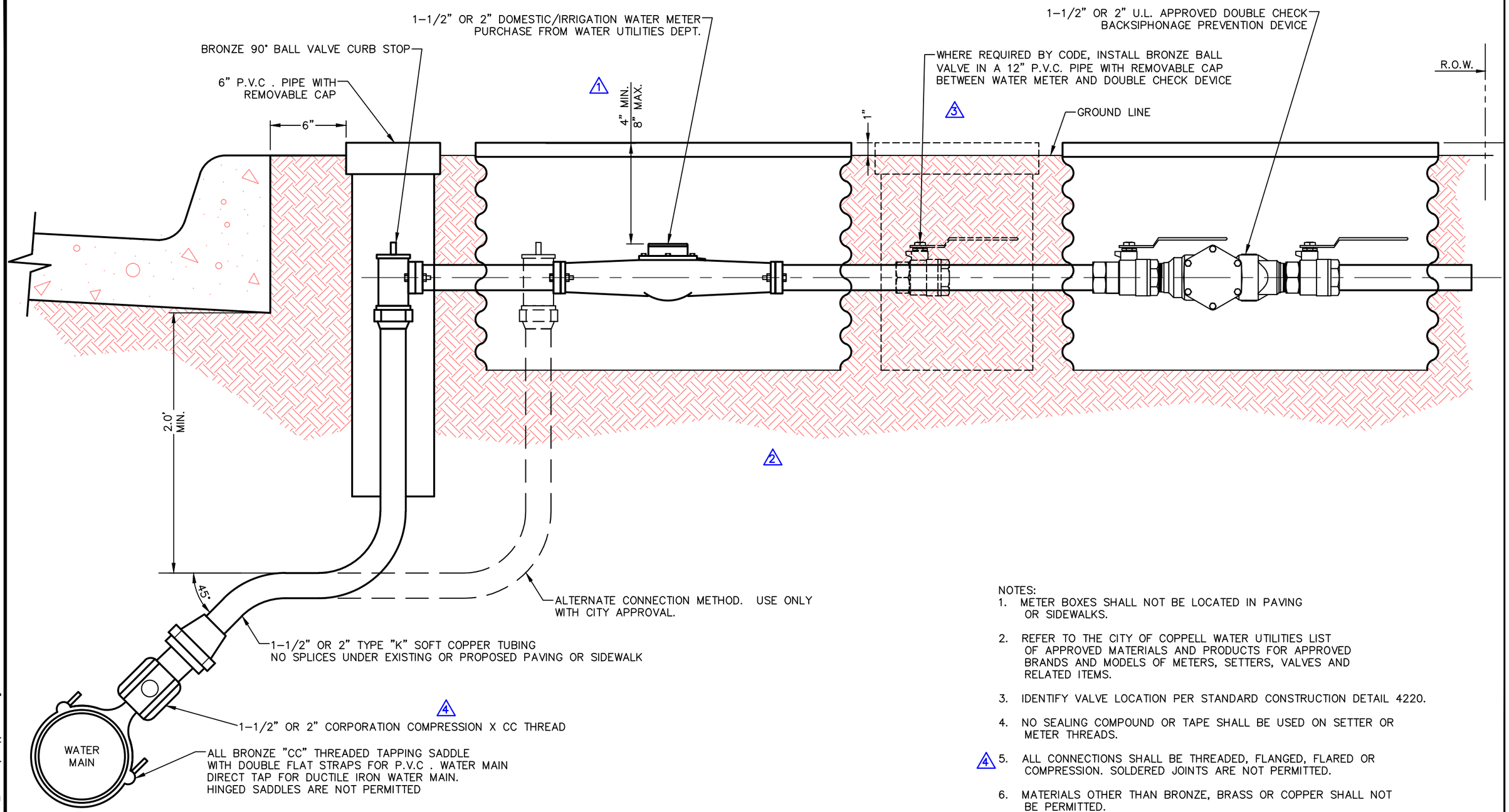

NOTES:

1. METER BOXES SHALL NOT BE LOCATED IN PAVING OR SIDEWALKS.
2. REFER TO THE CITY OF COPPELL WATER UTILITIES LIST OF APPROVED MATERIALS AND PRODUCTS FOR APPROVED BRANDS AND MODELS OF METERS, SETTERS, VALVES AND RELATED ITEMS.
3. IDENTIFY VALVE LOCATION PER STANDARD CONSTRUCTION DETAIL 4220.
4. NO SEALING COMPOUND OR TAPE SHALL BE USED ON SETTER OR METER THREADS.
5. (4) ALL CONNECTIONS SHALL BE THREADED, FLANGED, FLARED OR COMPRESSION. SOLDERED JOINTS ARE NOT PERMITTED.
6. MATERIALS OTHER THAN BRONZE, BRASS OR COPPER SHALL NOT BE PERMITTED.

North Central Texas Council of Governments

NOTE: STANDARDS ARE ADOPTED FROM THE NCTOG STANDARD DRAWINGS DATED NOV. '96, WITH LOCAL EXCEPTIONS.

NO.	LOCAL EXCEPTION	BY	DATE
4	CHANGED CALLOUT AND NOTE TO ALLOW COMPRESSION FITTINGS.	SWL	JUL. '14
3	ADD BRONZE BALL VALVE.	SWL	JUL. '14
2	DELETE REQUIREMENT FOR CRUSHED STONE EMBEDMENT UNDER METER CANS.	SWL	JUL. '14
1	CHANGED DIMENSION FROM 8.0".	SWL	JUL. '14

THE CITY OF COPPELL TEXAS 1890

STANDARD CONSTRUCTION DETAILS

WATER SERVICE INSTALLATION - IRRIGATION
1-1/2" OR 2" METER

CITY OF COPPELL DALLAS COUNTY, TEXAS

STD. SPEC. REFERENCE
501., 502., 504.

STANDARD DETAIL
4155

PATH: S:\Standard_Details\New_Dets_modified\SDCoppell2005.dwg

NOTES:

1. ALL PIPING INSIDE THE VAULT SHALL BE DUCTILE IRON WITH FLANGED FITTINGS.
2. THE DETECTOR CHECK VALVE SHALL BE PROVIDED BY THE CONTRACTOR AND MEET THE STANDARDS SET FORTH IN THE CITY OF COPPELL ENGINEERING DEPARTMENT LIST OF APPROVED PRODUCTS AND MATERIALS FOR PUBLIC WORKS CONSTRUCTION.
3. REFER TO THE CITY OF COPPELL ENGINEERING DEPARTMENT LIST OF APPROVED PRODUCTS AND MATERIALS FOR PUBLIC WORKS CONSTRUCTION FOR APPROVED BRANDS AND MODELS OF GATE VALVES AND RELATED FITTINGS.
4. VAULT AND GATE VALVE SHALL BE LOCATED WITHIN A DEDICATED UTILITY EASEMENT OR WITHIN THE PUBLIC RIGHT OF WAY.
5. IDENTIFY VALVE LOCATION PER STANDARD CONSTRUCTION DETAIL 4220.

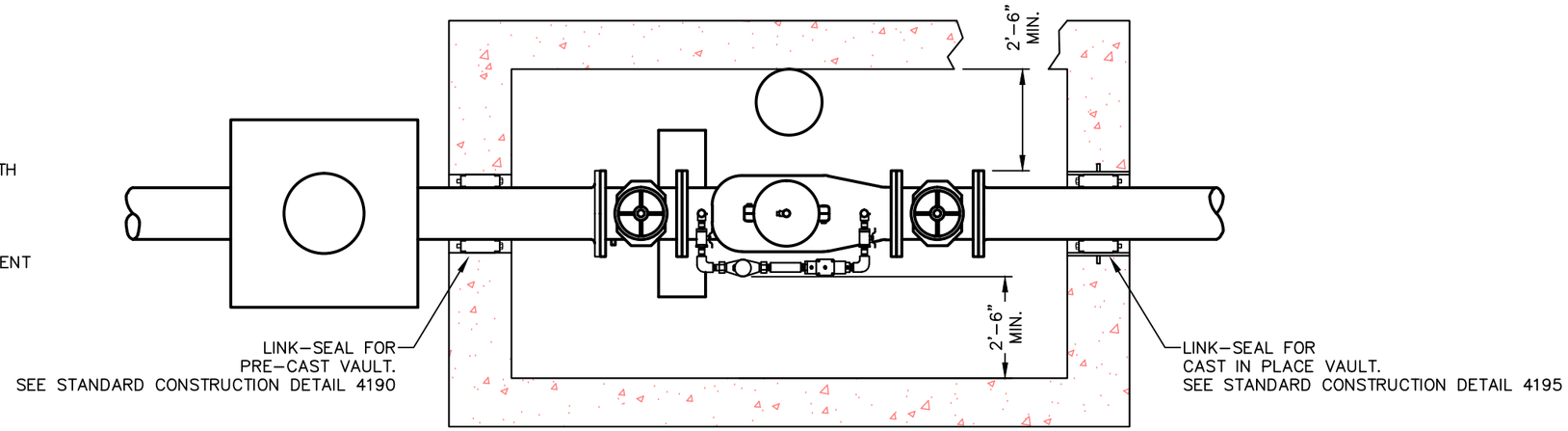

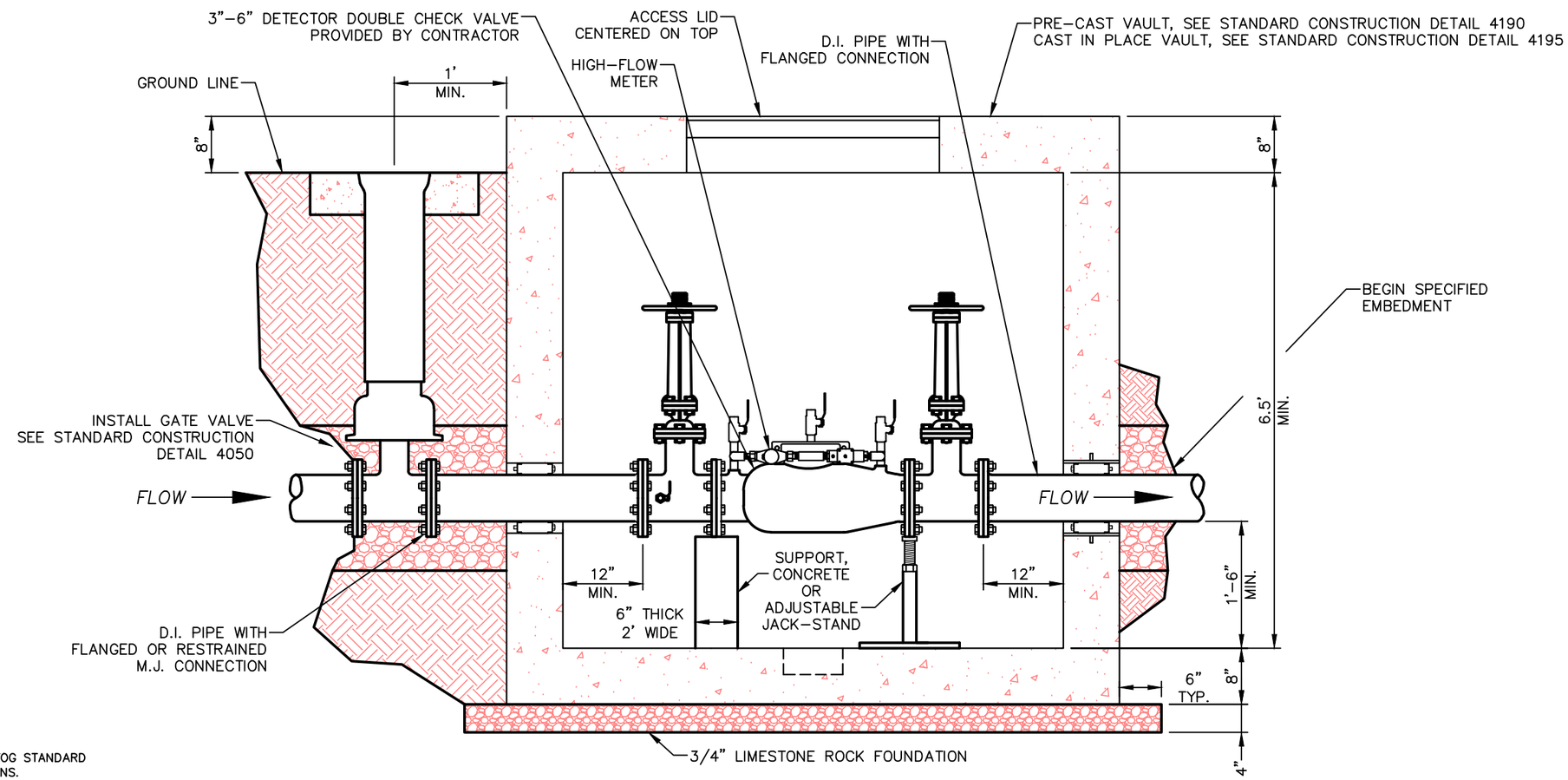

North Central Texas Council of Governments

NOTE: STANDARDS ARE ADOPTED FROM THE NCTOG STANDARD DRAWINGS DATED NOV. '96, WITH LOCAL EXCEPTIONS.

NO.	LOCAL EXCEPTION	BY	DATE

THE CITY OF COPPELL TEXAS 1890

STANDARD CONSTRUCTION DETAILS

DETECTOR CHECK VALVE INSTALLATION
3" TO 6" SERVICE

CITY OF COPPELL DALLAS COUNTY, TEXAS

STD. SPEC. REFERENCE
501., 502., 504.

STANDARD DETAIL
4160

PATH: S:\Standard_Details\New_Dets_modified\SDCoppell2005.dwg

NOTES:

1. ALL PIPING INSIDE THE VAULT SHALL BE DUCTILE IRON WITH FLANGED FITTINGS.
2. THE DOUBLE CHECK VALVE SHALL BE PROVIDED BY THE CONTRACTOR AND MEET THE STANDARDS SET FORTH IN THE CITY OF COPPELL ENGINEERING DEPARTMENT LIST OF APPROVED PRODUCTS AND MATERIALS FOR PUBLIC WORKS CONSTRUCTION.
3. REFER TO THE CITY OF COPPELL ENGINEERING DEPARTMENT LIST OF APPROVED PRODUCTS AND MATERIALS FOR PUBLIC WORKS CONSTRUCTION FOR APPROVED BRANDS AND MODELS OF GATE VALVES AND RELATED FITTINGS.
4. VAULT AND GATE VALVE SHALL BE LOCATED WITHIN A DEDICATED UTILITY EASEMENT OR WITHIN THE PUBLIC RIGHT OF WAY.
5. IDENTIFY VALVE LOCATION PER STANDARD CONSTRUCTION DETAIL 4220.

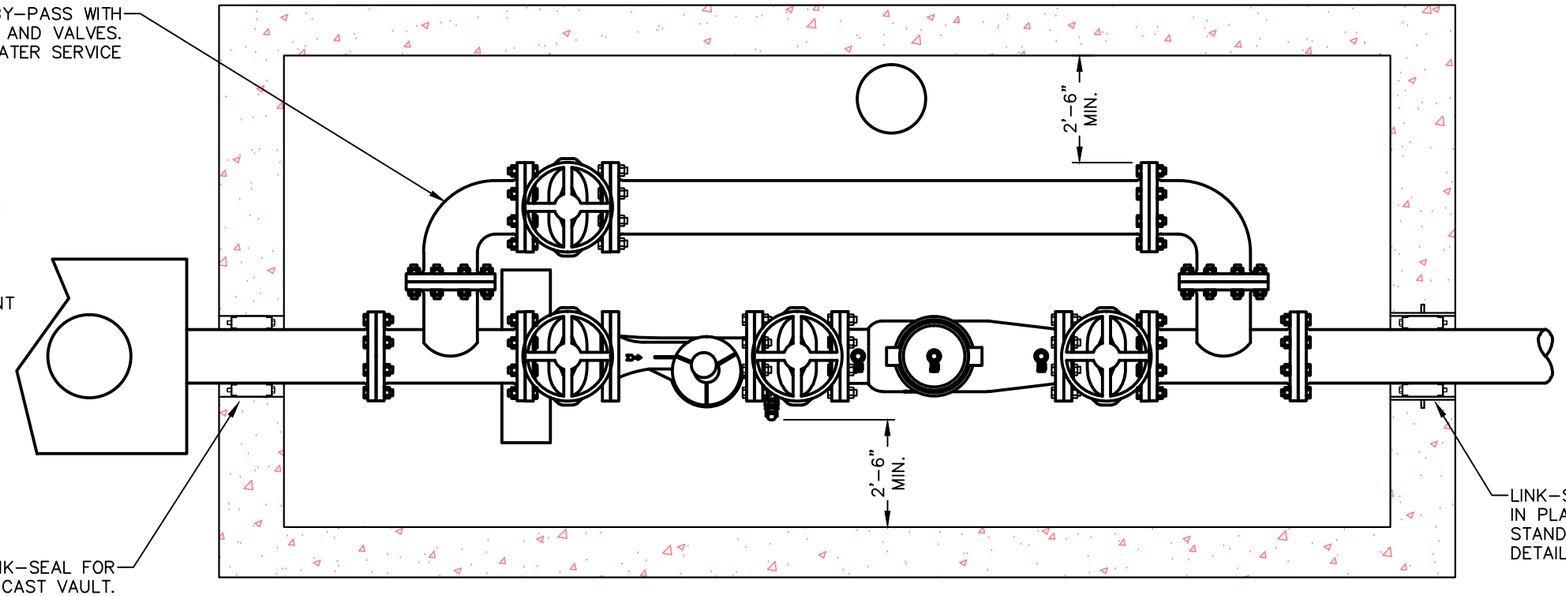

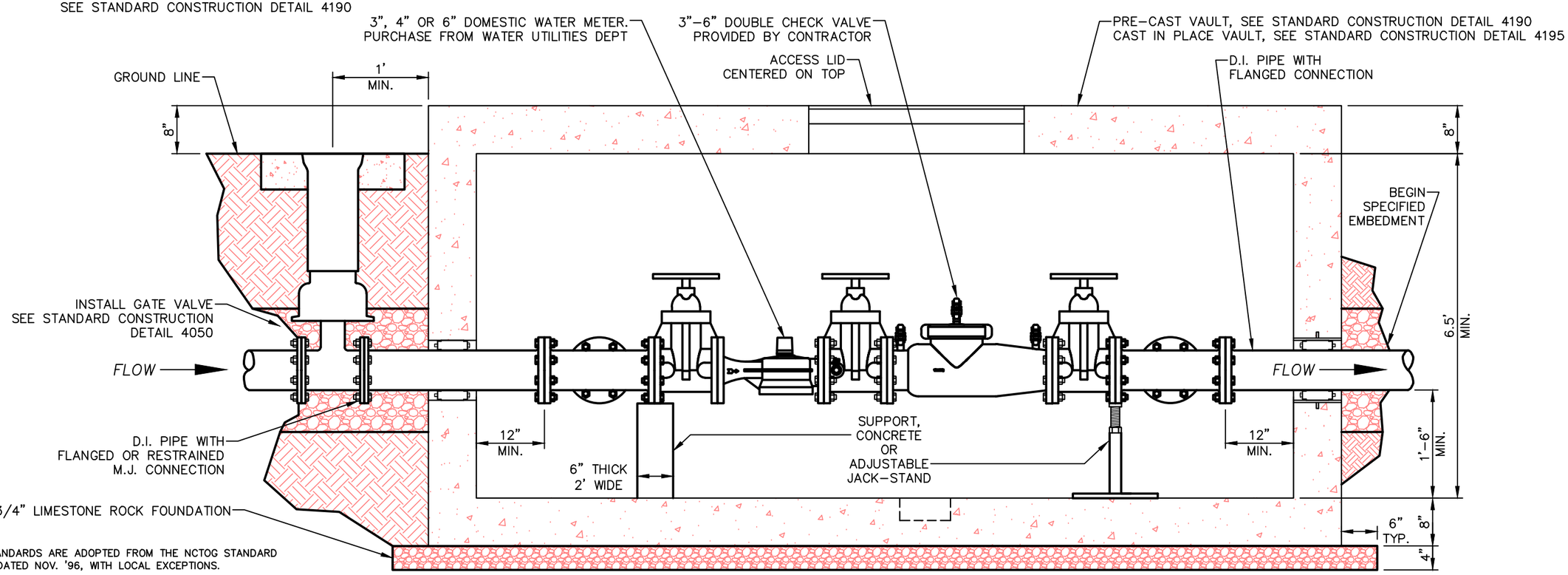

North Central Texas Council of Governments

NOTE: STANDARDS ARE ADOPTED FROM THE NCTOG STANDARD DRAWINGS DATED NOV. '96, WITH LOCAL EXCEPTIONS.

NO.	LOCAL EXCEPTION	BY	DATE
1	NEW DETAIL.	SWL	JUL. '14

THE CITY OF COPPELL TEXAS 1890

STANDARD CONSTRUCTION DETAILS

WATER SERVICE INSTALLATION-IRRIGATION OR COMMERCIAL DOMESTIC, 3" TO 6" SERVICE

CITY OF COPPELL DALLAS COUNTY, TEXAS

STD. SPEC. REFERENCE 501., 502., 504.

STANDARD DETAIL 1 4162

PATH: S:\Standard_Details\New_Dets_modified\SDCoppell2005.dwg

NOTES:

1. ALL PIPING INSIDE THE VAULT SHALL BE DUCTILE IRON WITH FLANGED FITTINGS.
2. THE DETECTOR CHECK VALVE SHALL BE PROVIDED BY THE CONTRACTOR AND MEET THE STANDARDS SET FORTH IN THE CITY OF COPPELL ENGINEERING DEPARTMENT LIST OF APPROVED PRODUCTS AND MATERIALS FOR PUBLIC WORKS CONSTRUCTION.
3. REFER TO THE CITY OF COPPELL ENGINEERING DEPARTMENT LIST OF APPROVED PRODUCTS AND MATERIALS FOR PUBLIC WORKS CONSTRUCTION FOR APPROVED BRANDS AND MODELS OF GATE VALVES AND RELATED FITTINGS.
4. VAULT AND GATE VALVE SHALL BE LOCATED WITHIN A DEDICATED UTILITY EASEMENT OR WITHIN THE PUBLIC RIGHT OF WAY.
5. IDENTIFY VALVE LOCATION PER STANDARD CONSTRUCTION DETAIL 4220.

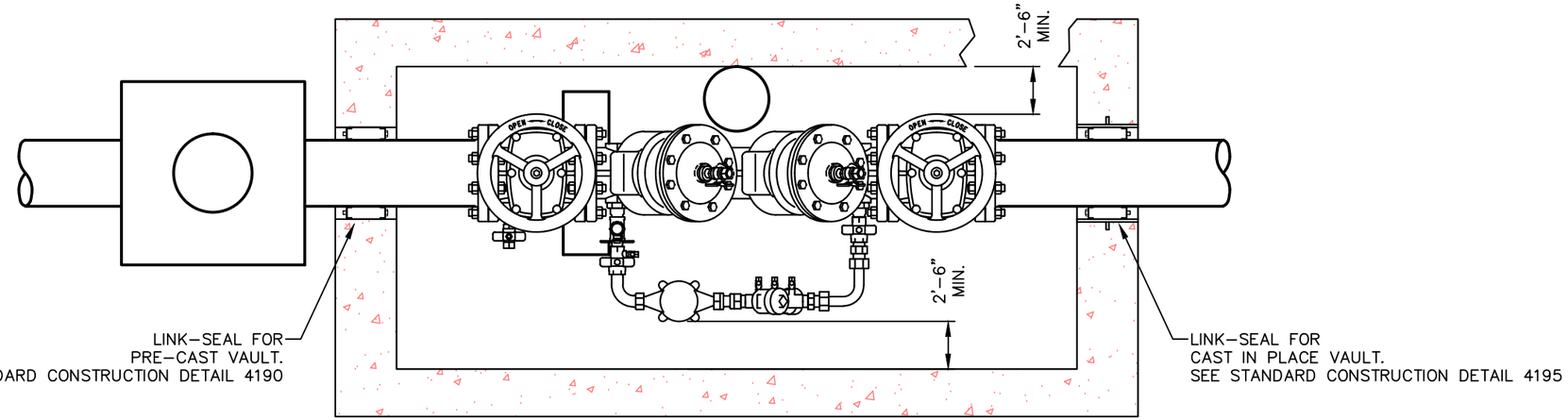

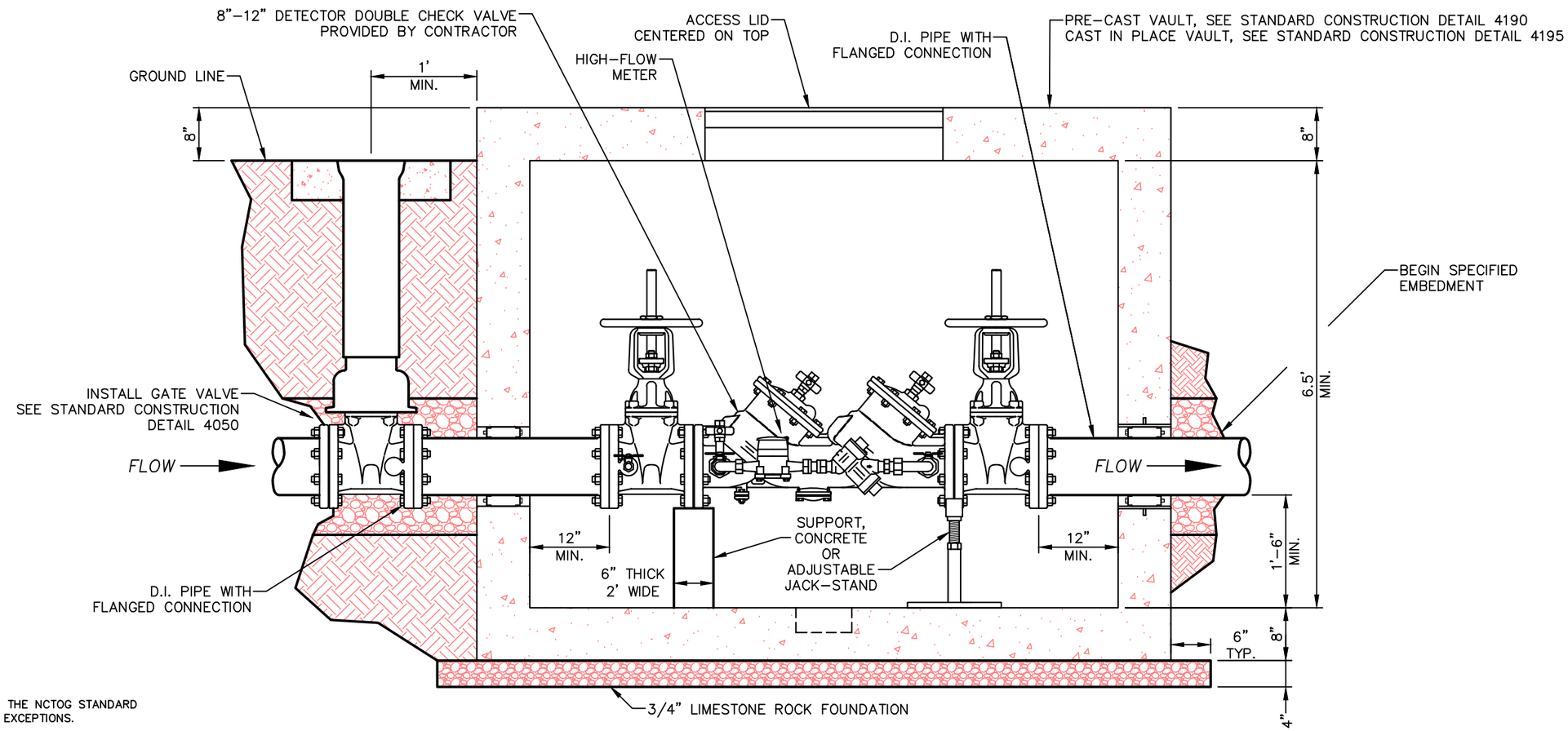

North Central Texas Council of Governments

NOTE: STANDARDS ARE ADOPTED FROM THE NCTOG STANDARD DRAWINGS DATED NOV. '96, WITH LOCAL EXCEPTIONS.

NO.	LOCAL EXCEPTION	BY	DATE

THE CITY OF COPPELL TEXAS 1890

STANDARD CONSTRUCTION DETAILS

DETECTOR CHECK VALVE INSTALLATION
8" TO 12" SERVICE

CITY OF COPPELL DALLAS COUNTY, TEXAS

STD. SPEC. REFERENCE
501., 502., 504.

STANDARD DETAIL
4165

PATH: S:\Standard_Details\New_Dets_modified\SDCoppell2005.dwg

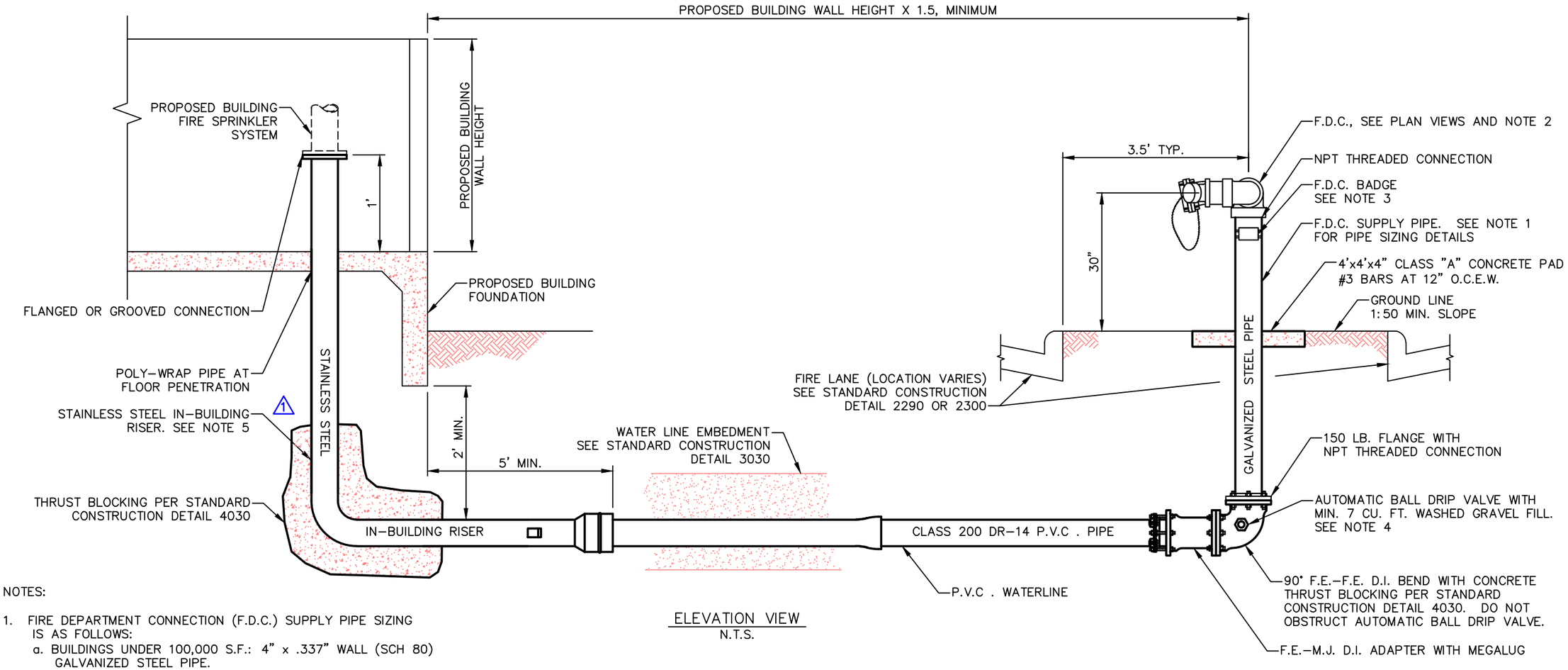

ELEVATION VIEW
N.T.S.

NOTES:

1. FIRE DEPARTMENT CONNECTION (F.D.C.) SUPPLY PIPE SIZING IS AS FOLLOWS:
   a. BUILDINGS UNDER 100,000 S.F.: 4" x .337" WALL (SCH 80) GALVANIZED STEEL PIPE.
   b. BUILDINGS 100,000 S.F. AND LARGER: 6" x .432" WALL (SCH 80) GALVANIZED STEEL PIPE, OR LARGER AS SPECIFIED BY CITY AND FIRE MARSHAL.
2. F.D.C. CONNECTION MANIFOLD SHOWN IS TYPICAL. ACTUAL QUANTITY AND SIZE OF CONNECTIONS TO BE DETERMINED ON A CASE BY CASE BASIS.
3. EACH F.D.C. SHALL BE FITTED WITH AN IDENTIFICATION BADGE BEARING THE STREET NUMBER AND STREET NAME OF THE BUILDING ASSOCIATED WITH THE F.D.C.
4. D.I. 90° BEND SHALL BE EQUIPPED WITH AN AUTOMATIC BALL DRIP VALVE INSTALLED IN A HORIZONTAL POSITION PER NFPA.
5. GALVANIZED STEEL AND DUCTILE IRON IN-BUILDING RISER ASSEMBLY MAY BE USED WITH APPROVAL OF CITY ENGINEER AND FIRE MARSHAL. (1)

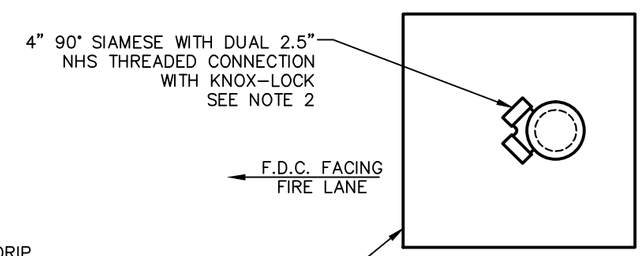

PLAN VIEW
(BUILDINGS UNDER 100K S.F.)
N.T.S.

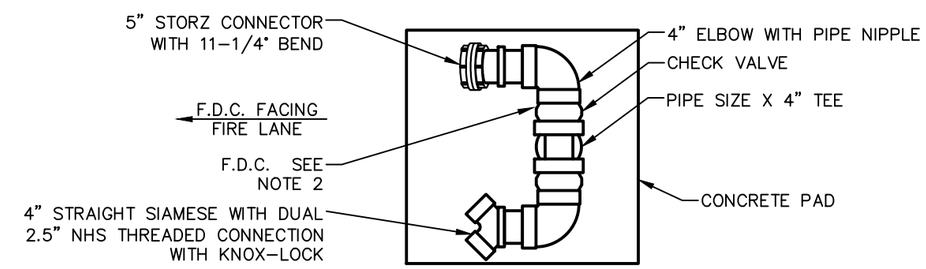

PLAN VIEW
(BUILDINGS 100K S.F. AND LARGER)
N.T.S.

North Central Texas Council of Governments

NOTE: STANDARDS ARE ADOPTED FROM THE NCTOG STANDARD DRAWINGS DATED NOV. '96, WITH LOCAL EXCEPTIONS.

NO.	LOCAL EXCEPTION	BY	DATE
1	CHANGED IN-BUILDING RISER TO ONE PIECE STAINLESS STEEL TYPE.	SWL	JUL. '14

THE CITY OF COPPELL TEXAS 1890

STANDARD CONSTRUCTION DETAILS

FIRE DEPARTMENT CONNECTION (F.D.C.) LOCATED OUTSIDE OF PAVING

CITY OF COPPELL DALLAS COUNTY, TEXAS

STD. SPEC. REFERENCE 303., 501., 502.

STANDARD DETAIL 4170

PATH: S:\Standard_Details\New_Dets_modified\SDCoppell2005.dwg

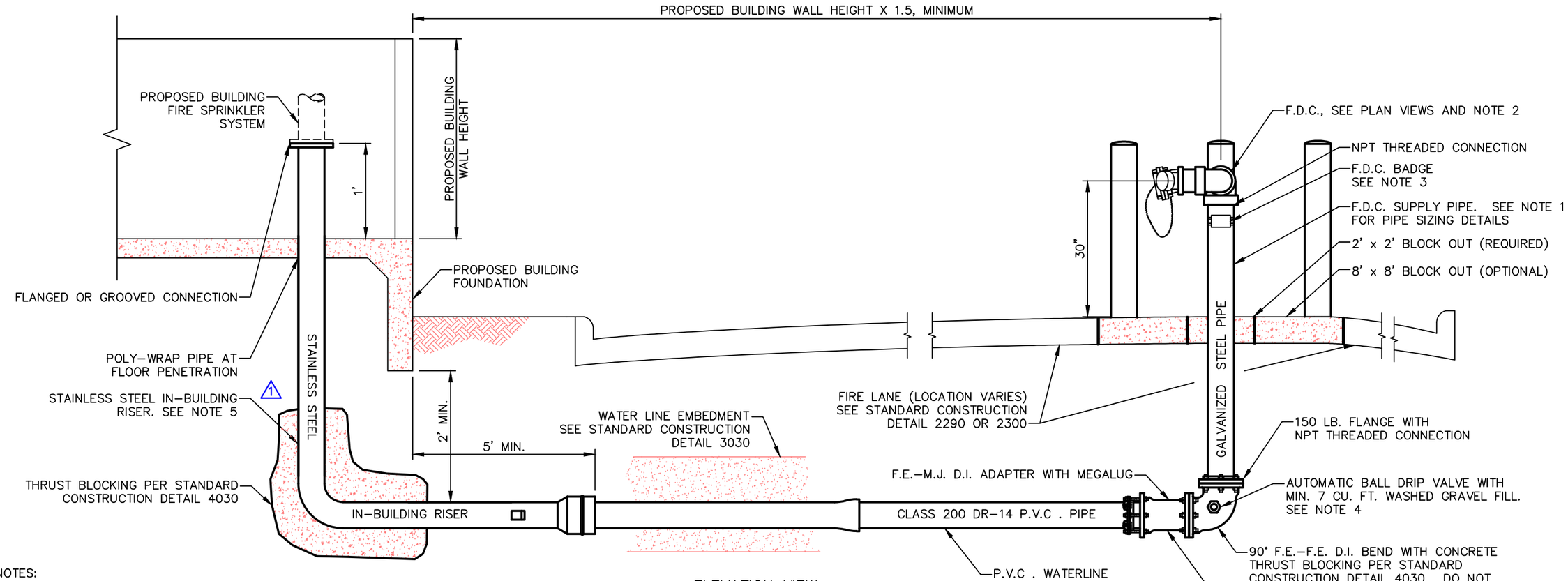

ELEVATION VIEW
N.T.S.

NOTES:

1. FIRE DEPARTMENT CONNECTION (F.D.C.) SUPPLY PIPE SIZING IS AS FOLLOWS:
   a. BUILDINGS UNDER 100,000 S.F.: 4" x .337" WALL (SCH 80) GALVANIZED STEEL PIPE.
   b. BUILDINGS 100,000 S.F. AND LARGER: 6" x .432" WALL (SCH 80) GALVANIZED STEEL PIPE, OR LARGER AS SPECIFIED BY CITY AND FIRE MARSHAL.
2. F.D.C. CONNECTION MANIFOLD SHOWN IS TYPICAL. ACTUAL QUANTITY AND SIZE OF CONNECTIONS TO BE DETERMINED ON A CASE BY CASE BASIS.
3. EACH F.D.C. SHALL BE FITTED WITH AN IDENTIFICATION BADGE BEARING THE STREET NUMBER AND STREET NAME OF THE BUILDING ASSOCIATED WITH THE F.D.C.
4. D.I. 90° BEND SHALL BE EQUIPPED WITH AN AUTOMATIC BALL DRIP VALVE INSTALLED IN A HORIZONTAL POSITION PER NFPA.
5. GALVANIZED STEEL AND DUCTILE IRON IN-BUILDING RISER ASSEMBLY MAY BE USED WITH APPROVAL OF CITY AND FIRE MARSHAL. (1)

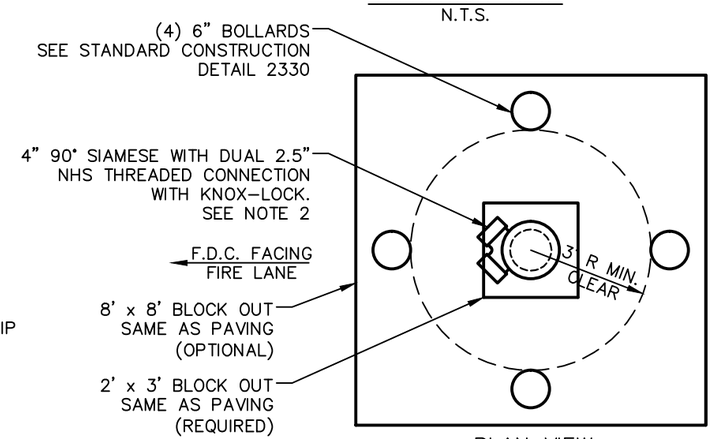

PLAN VIEW
(BUILDINGS UNDER 100K S.F.)
N.T.S.

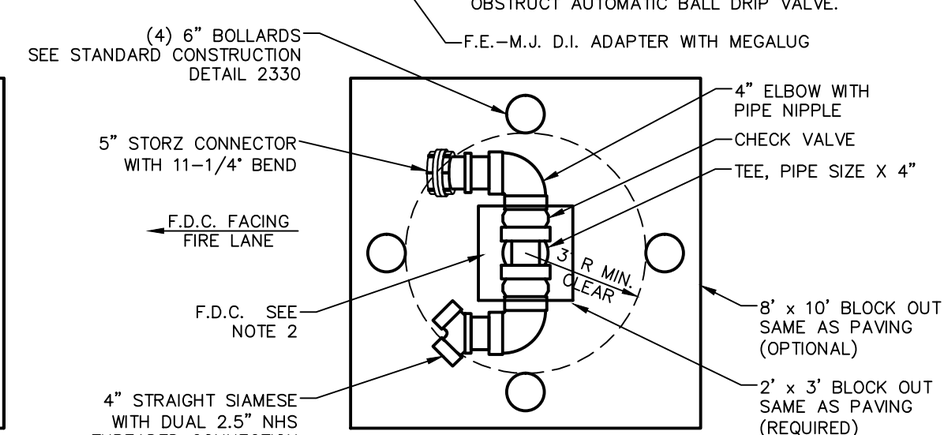

PLAN VIEW
(BUILDINGS 100K S.F. AND LARGER)
N.T.S.

North Central Texas Council of Governments

NOTE: STANDARDS ARE ADOPTED FROM THE NCTOG STANDARD DRAWINGS DATED NOV. '96, WITH LOCAL EXCEPTIONS.

NO.	LOCAL EXCEPTION	BY	DATE
1	CHANGED IN-BUILDING RISER TO ONE PIECE STAINLESS STEEL TYPE.	SWL	JUL. '14

THE CITY OF COPPELL TEXAS 1890

STANDARD CONSTRUCTION DETAILS

FIRE DEPARTMENT CONNECTION (F.D.C.) LOCATED INSIDE OF PAVING

CITY OF COPPELL DALLAS COUNTY, TEXAS

STD. SPEC. REFERENCE 501., 502.

STANDARD DETAIL 4175

PATH: S:\Standard_Details\New_Dets_modified\SDCoppell2005.dwg

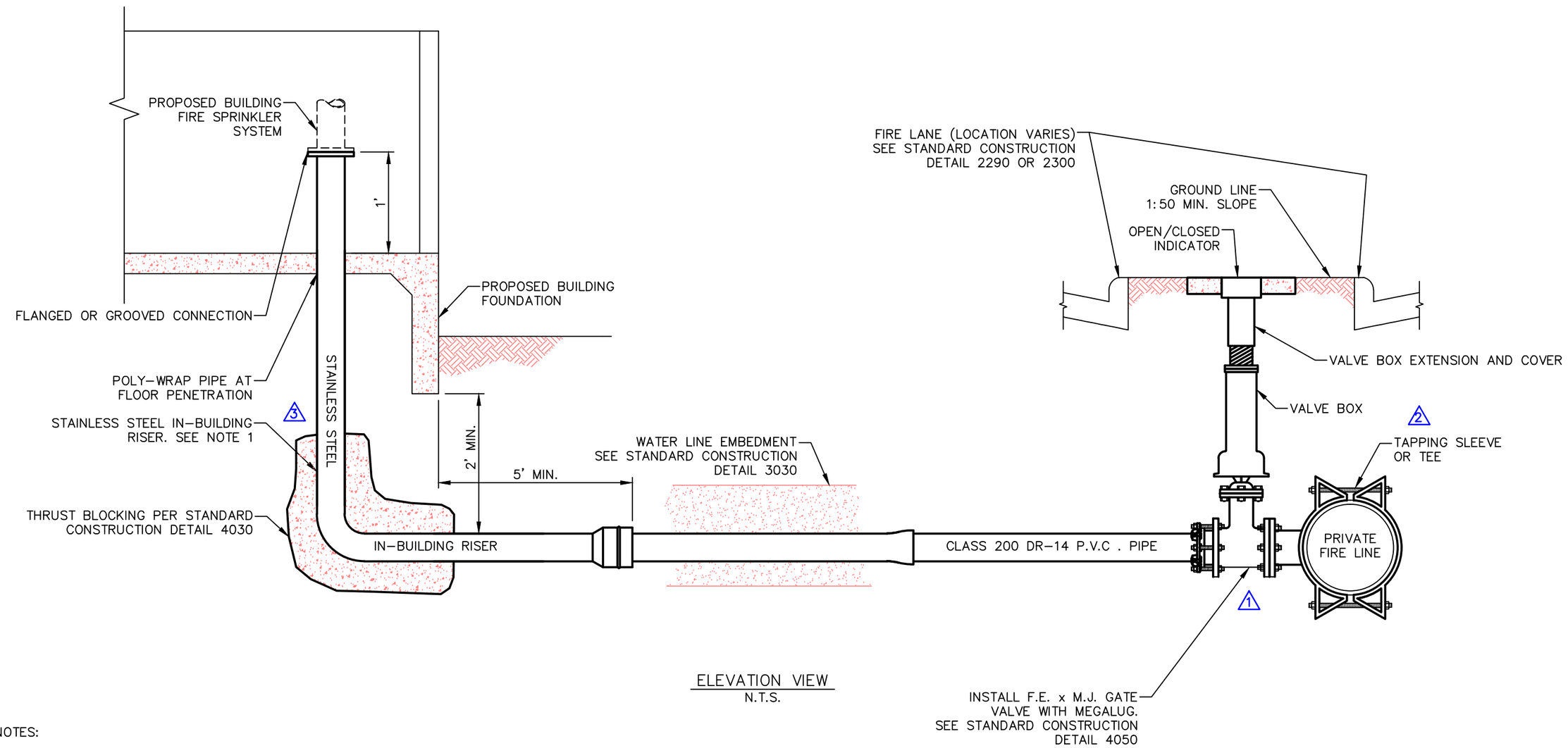

ELEVATION VIEW
N.T.S.

NOTES:

3 1. GALVANIZED STEEL AND DUCTILE IRON IN-BUILDING RISER ASSEMBLY MAY BE USED WITH APPROVAL OF CITY ENGINEER AND FIRE MARSHAL.

North Central Texas Council of Governments

NOTE: STANDARDS ARE ADOPTED FROM THE NCTOG STANDARD DRAWINGS DATED NOV. '96, WITH LOCAL EXCEPTIONS.

NO.	LOCAL EXCEPTION	BY	DATE
3	CHANGED IN-BUILDING RISER TO ONE PIECE STAINLESS STEEL TYPE.	SWL	JUL. '14
2	ADD "OR TEE" TO CALLOUT.	SWL	JUL. '14
1	DELETE F.E. TO M.J. ADAPTER, SPECIFY F.E. TO M.J. VALVE.	SWL	JUL. '14

THE CITY OF COPPELL TEXAS 1890

STANDARD CONSTRUCTION DETAILS

BUILDING FIRE SPRINKLER SYSTEM CONNECTION TO PRIVATE WATER MAIN

CITY OF COPPELL DALLAS COUNTY, TEXAS

STD. SPEC. REFERENCE 501., 502.

STANDARD DETAIL 4180

PATH: S:\Standard_Details\New_Dets_modified\SDCoppell2005.dwg

NOTES:

1. CONCRETE IN PRE-CAST VAULTS SHALL BE 6" THICK CLASS "F", REINFORCED WITH #4 BARS ON 8" CENTERS EACH WAY. THESE ARE MINIMUM SPECIFICATIONS.
2. A SUMP 2" DEEP x 12" IN DIAMETER SHALL BE INSTALLED TO ONE SIDE OF, AND CENTERED IN, THE BOTTOM SLAB OF THE VAULT. A RECTANGULAR SUMP OF SIMILAR VOLUME IS ACCEPTABLE.
3. THE VAULT SHALL NOT BE INSTALLED IN ANY PAVED AREA AND MUST BE LOCATED WITHIN A DEDICATED UTILITY EASEMENT OR WITHIN THE PUBLIC RIGHT OF WAY.
4. A DRAWING WITH THE EXACT MEASUREMENTS OF THE VAULT SHALL BE SUBMITTED TO THE CITY ENGINEER FOR APPROVAL PRIOR TO INSTALLATION.
5. THE VAULT LID SHALL BE A BILCO TYPE Q-4 3'x 3' SINGLE LEAF DESIGN WITH 1/4" x 3" ANGLE STEEL FRAME AND BOLTED EXTERIOR STRAP ANCHORS. THE LEAF SHALL BE 1/4" STEEL DIAMOND TREAD PLATE, PIVOTING ON TORSION BARS. MINIMUM LIVE LOAD CAPACITY IS 150 LBS. PER S.F. A LOCKING HASP AND RING SHALL BE PROVIDED.
6. VAULT LID SHALL BE PAINTED WITH MED. BLUE ENAMEL.
7. WALL PENETRATIONS SHALL BE SEALED WITH A "LINK-SEAL" MODEL C SEGMENTED RUBBER SEAL. WALL PENETRATION SHALL BE CORE DRILLED; JACK HAMMERING OR CHIPPING IS NOT PERMITTED. DIAMETER SHALL BE AS RECOMMENDED BY SEAL MANUFACTURER FOR THE PIPE SIZE IN THE VAULT.
8. VAULT BOTTOM SHALL HAVE A MINIMUM 6" WALL LIP RECESS; FLAT BOTTOM VAULTS ARE NOT ACCEPTABLE. VAULT WALLS WITH THIN-WALL KNOCKOUTS OR "DOG HOUSE" PENETRATION OPENINGS ARE NOT ACCEPTABLE.
9. INTERIOR VAULT DEPTH SHALL BE A MINIMUM OF 6'-6".
10. CASTING DATE SHALL BE STENCILED OR STAMPED ON VAULT INTERIOR.

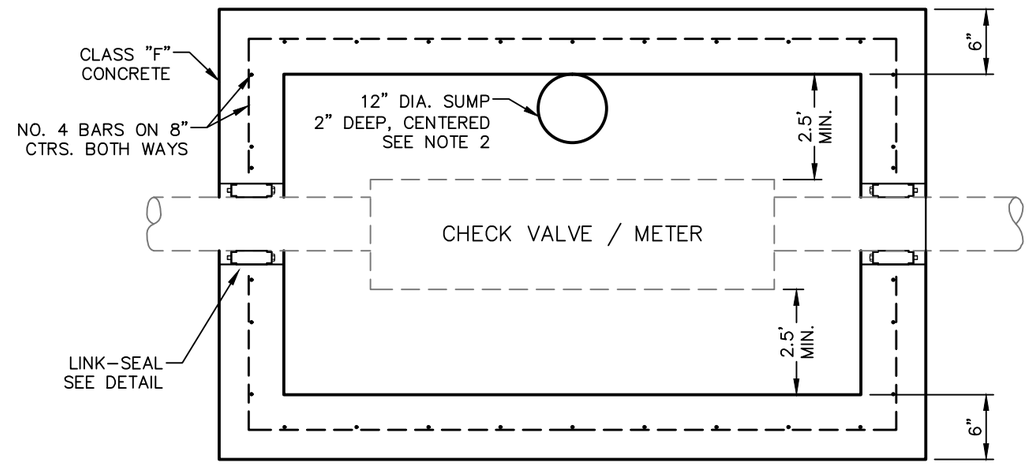

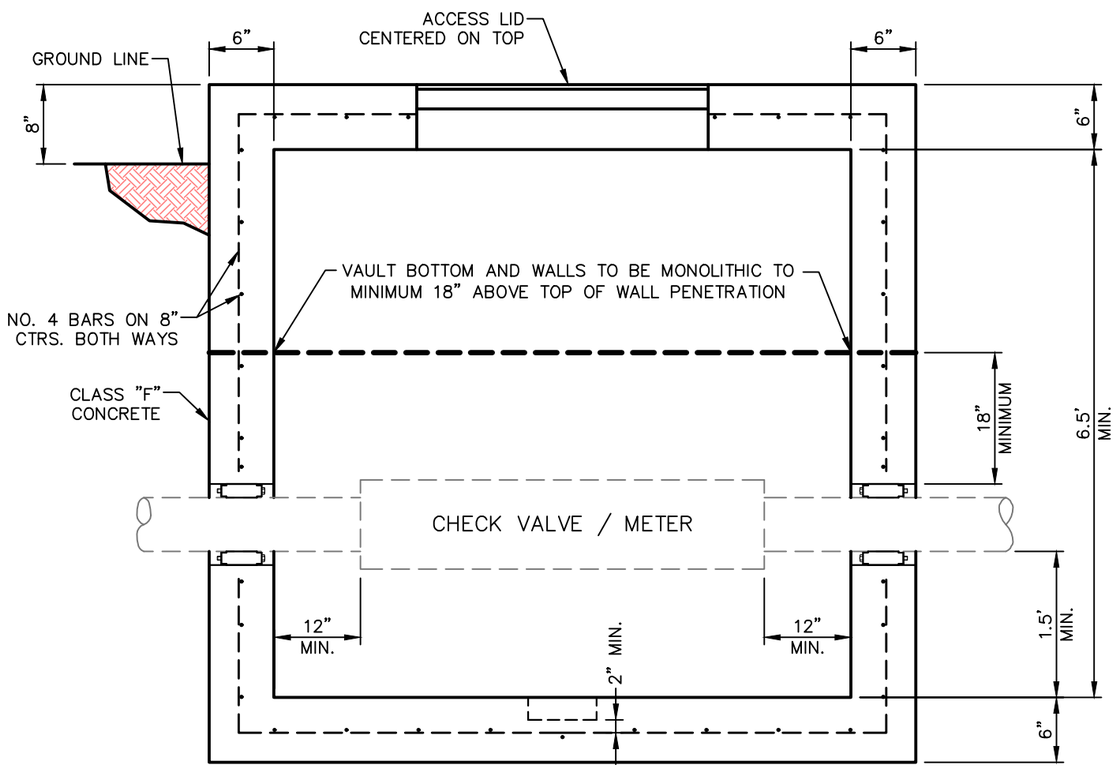

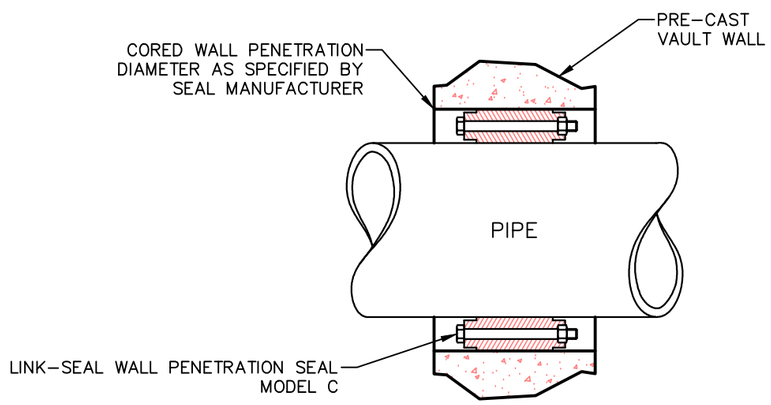

WALL PENETRATION AND LINK-SEAL DETAIL

N.T.S.

North Central Texas Council of Governments

NOTE: STANDARDS ARE ADOPTED FROM THE NCTOG STANDARD DRAWINGS DATED NOV. '96, WITH LOCAL EXCEPTIONS.

NO.	LOCAL EXCEPTION	BY	DATE

THE CITY OF COPPELL TEXAS 1890

STANDARD CONSTRUCTION DETAILS

DETECTOR CHECK VAULT
PRE-CAST CONSTRUCTION

CITY OF COPPELL DALLAS COUNTY, TEXAS

STD. SPEC. REFERENCE 702.

STANDARD DETAIL 4190

PATH: S:\Standard_Details\New_Dets_modified\SDCoppell2005.dwg

NOTES:

1. CONCRETE IN CAST IN PLACE VAULTS SHALL BE 8" THICK CLASS "F", REINFORCED WITH #4 BARS ON 12" CENTERS EACH WAY. THESE ARE MINIMUM SPECIFICATIONS.
2. A SUMP 2" DEEP x 12" IN DIAMETER SHALL BE INSTALLED TO ONE SIDE OF, AND CENTERED IN, THE BOTTOM SLAB OF THE VAULT.
3. THE VAULT SHALL NOT BE INSTALLED IN ANY PAVED AREA AND MUST BE LOCATED WITHIN A DEDICATED UTILITY EASEMENT OR WITHIN THE PUBLIC RIGHT OF WAY.
4. A DRAWING WITH THE EXACT MEASUREMENTS OF THE VAULT SHALL BE SUBMITTED TO THE CITY ENGINEER FOR APPROVAL PRIOR TO INSTALLATION.
5. THE VAULT LID SHALL BE A BILCO TYPE Q-4 3'x 3' SINGLE LEAF DESIGN WITH 1/4" x 3" ANGLE STEEL FRAME AND BOLTED EXTERIOR STRAP ANCHORS. THE LEAF SHALL BE 1/4" STEEL DIAMOND TREAD PLATE, PIVOTING ON TORSION BARS. MINIMUM LIVE LOAD CAPACITY IS 150 LBS. PER S.F. A LOCKING HASP AND RING SHALL BE PROVIDED.
6. THE LID SHALL BE PAINTED WITH MED. BLUE ENAMEL.
7. WALL PENETRATIONS SHALL BE SEALED WITH A "LINK-SEAL" MODEL C SEGMENTED RUBBER SEAL AND MODEL WS PENETRATION SLEEVE. THE SLEEVE SHALL BE IN POSITION AT THE TIME THE WALL IS POURED.
8. INTERIOR VAULT DEPTH SHALL BE A MINIMUM OF 6'-6".

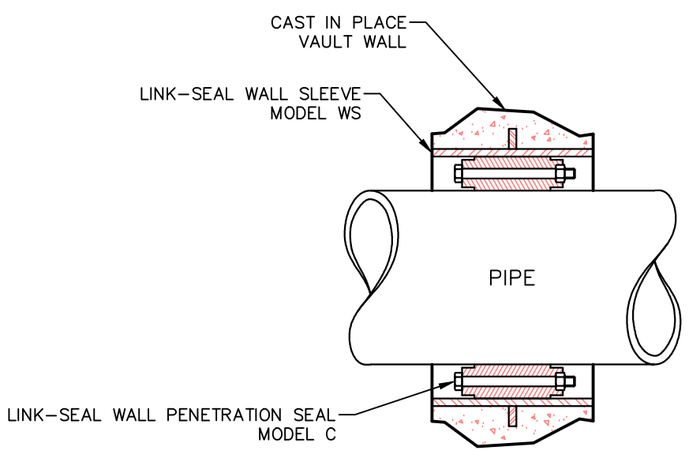

WALL PENETRATION AND LINK-SEAL DETAIL
N.T.S.

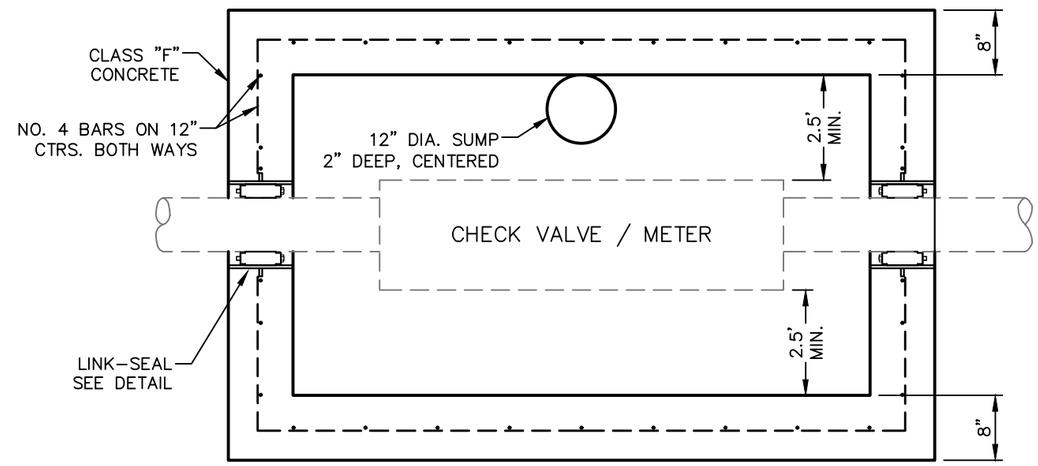

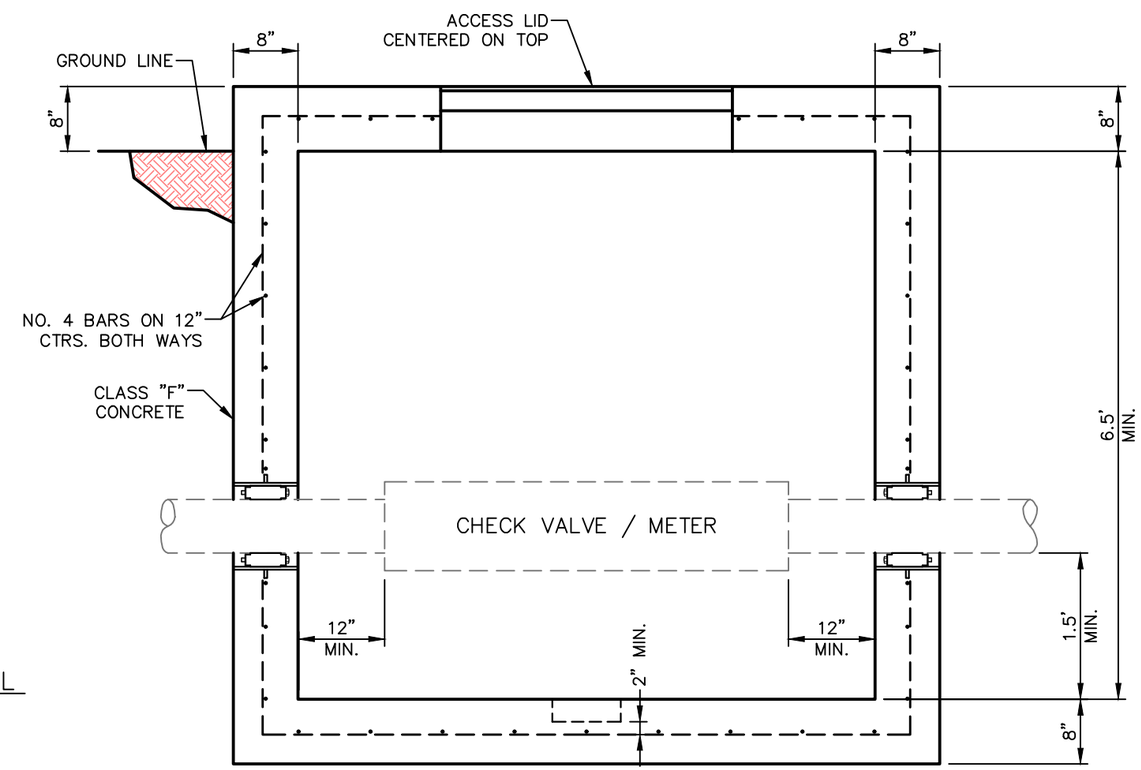

North Central Texas Council of Governments

NOTE: STANDARDS ARE ADOPTED FROM THE NCTOG STANDARD DRAWINGS DATED NOV. '96, WITH LOCAL EXCEPTIONS.

NO.	LOCAL EXCEPTION	BY	DATE

THE CITY OF COPPELL TEXAS 1890

STANDARD CONSTRUCTION DETAILS

DETECTOR CHECK VAULT
CAST-IN-PLACE CONSTRUCTION

CITY OF COPPELL DALLAS COUNTY, TEXAS

STD. SPEC. REFERENCE 702.

STANDARD DETAIL 4195

PATH: S:\Standard_Details\New_Dets_modified\SDCoppell2005.dwg

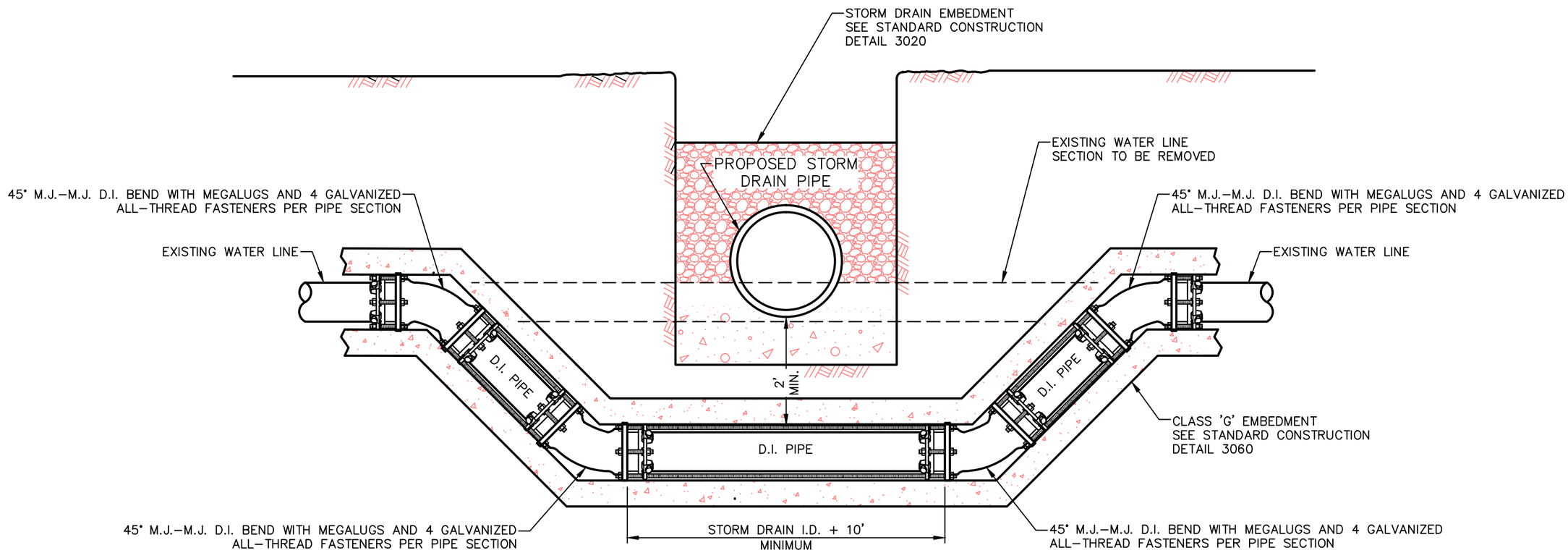

NOTES:

1. ALL D.I. PIPE SHALL BE POLYWRAPPED PRIOR TO EMBEDMENT
2. (1) P.V.C. PIPE MAY BE USED WITH APPROVAL OF CITY ENGINEER

North Central Texas Council of Governments

NOTE: STANDARDS ARE ADOPTED FROM THE NCTOG STANDARD DRAWINGS DATED NOV. '96, WITH LOCAL EXCEPTIONS.

NO.	LOCAL EXCEPTION	BY	DATE
1	ADD NOTE 2	SWL	JUL. '14

THE CITY OF COPPELL TEXAS 1890

STANDARD CONSTRUCTION DETAILS

WATER MAIN ADJUSTMENT AT STORM DRAIN CROSSING

CITY OF COPPELL DALLAS COUNTY, TEXAS

STD. SPEC. REFERENCE 501., 504.

STANDARD DETAIL 4200

PATH: S:\Standard_Details\New_Dets_modified\SDCoppell2005.dwg

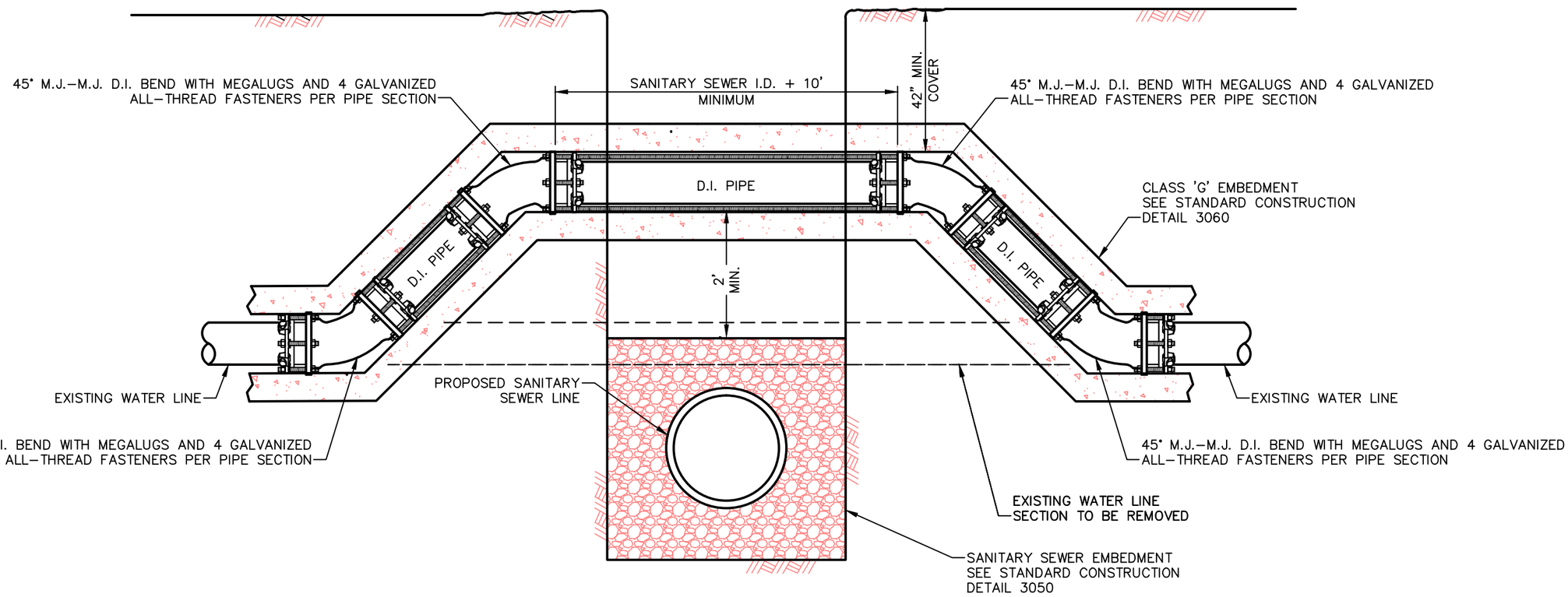

NOTES:

1. ALL D.I. PIPE SHALL BE POLYWRAPPED PRIOR TO EMBEDMENT
2. △1 P.V.C. PIPE MAY BE USED WITH APPROVAL OF CITY ENGINEER
3. WATER LINE AND SANITARY SEWER LINE SEPARATION SHALL CONFORM WITH T.C.E.Q. REGULATIONS.

North Central Texas Council of Governments

NOTE: STANDARDS ARE ADOPTED FROM THE NCTOG STANDARD DRAWINGS DATED NOV. '96, WITH LOCAL EXCEPTIONS.

NO.	LOCAL EXCEPTION	BY	DATE
△1	ADD NOTE 2	SWL	JUL. '14

THE CITY OF COPPELL TEXAS 1890

STANDARD CONSTRUCTION DETAILS

WATER MAIN ADJUSTMENT AT SANITARY SEWER CROSSING

CITY OF COPPELL DALLAS COUNTY, TEXAS

STD. SPEC. REFERENCE 501., 504.

STANDARD DETAIL 4210

PATH: S:\Standard_Details\New_Dets_modified\SDCoppell2005.dwg

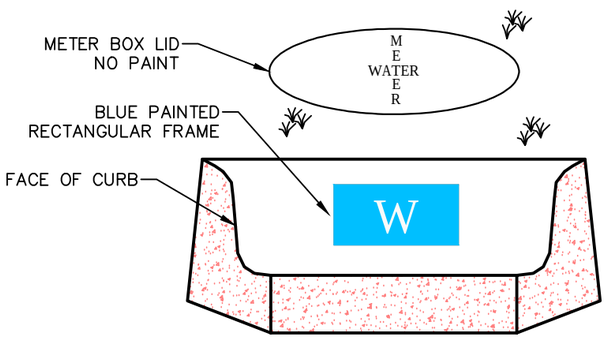

DOMESTIC AND IRRIGATION METER IDENTIFICATION, RESIDENTIAL

N.T.S.

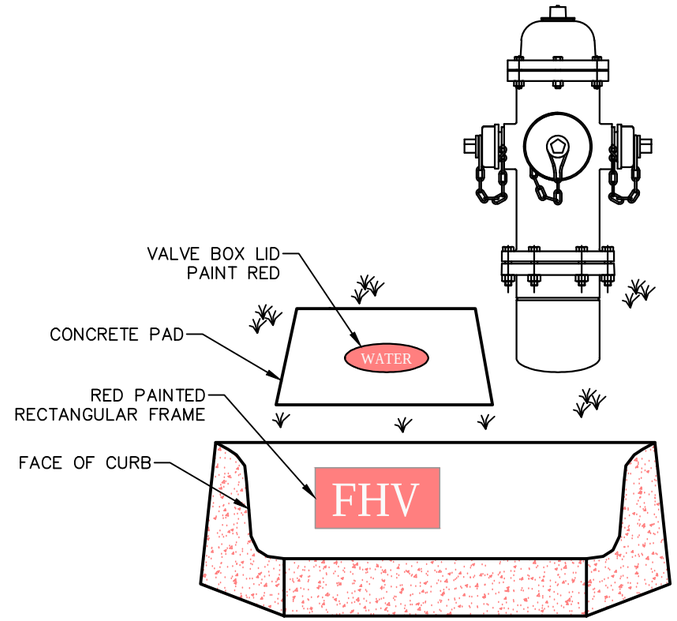

FIRE HYDRANT VALVE IDENTIFICATION

N.T.S.

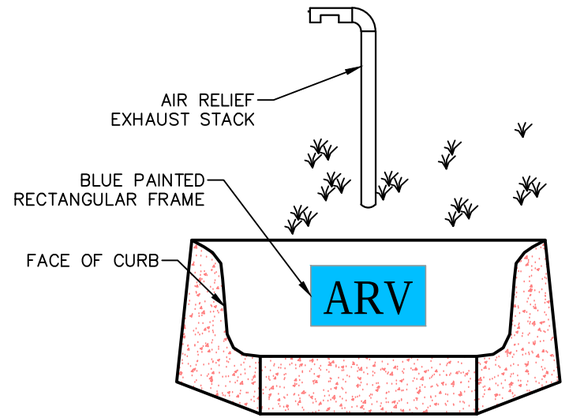

1 AIR RELIEF VALVE IDENTIFICATION

N.T.S.

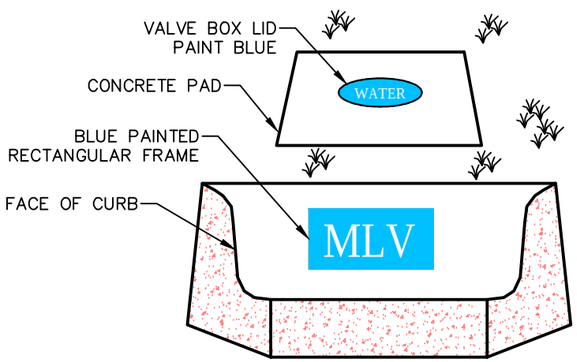

MAIN LINE VALVE IDENTIFICATION

N.T.S.

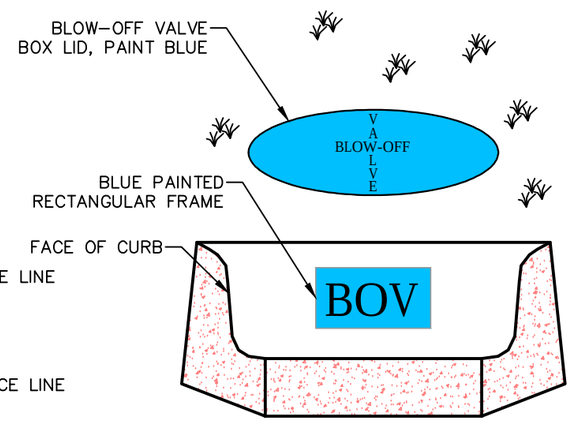

2 BLOW-OFF VALVE IDENTIFICATION

N.T.S.

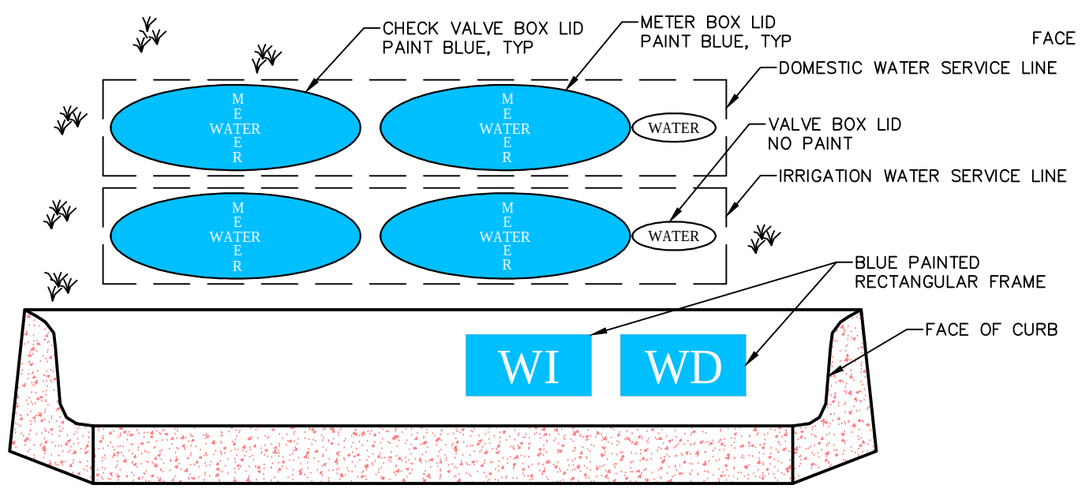

DOMESTIC AND IRRIGATION VALVE AND METER IDENTIFICATION, COMMERCIAL

N.T.S.

NOTES:

1. IDENTIFICATION LETTERS SHALL BE CHISELED OR CUT INTO THE FACE OF THE CONCRETE CURB AND IN LINE WITH VALVE LOCATION. LETTERS SHALL BE 3" HIGH X 3" WIDE BY APPROXIMATELY 1/8" DEEP.

2. PAINTED RECTANGULAR FRAME SHALL EXTEND 1" BEYOND IDENTIFICATION LETTERS.

North Central Texas Council of Governments

NOTE: STANDARDS ARE ADOPTED FROM THE NCTOG STANDARD DRAWINGS DATED NOV. '96, WITH LOCAL EXCEPTIONS.

NO.	LOCAL EXCEPTION	BY	DATE
2	ADD BLOW OFF VALVE DETAIL.	SWL	JUL. '14
1	ADD AIR RELIEF VALVE DETAIL.	SWL	JUL. '14

THE CITY OF COPPELL TEXAS 1890

STANDARD CONSTRUCTION DETAILS

WATER VALVE LOCATION AND IDENTIFICATION
CURB LETTERING AND COLOR CODING

CITY OF COPPELL DALLAS COUNTY, TEXAS

STD. SPEC. REFERENCE 804.

STANDARD DETAIL 4220

PATH: S:\Standard_Details\New_Dets_modified\SDCoppell2005.dwg

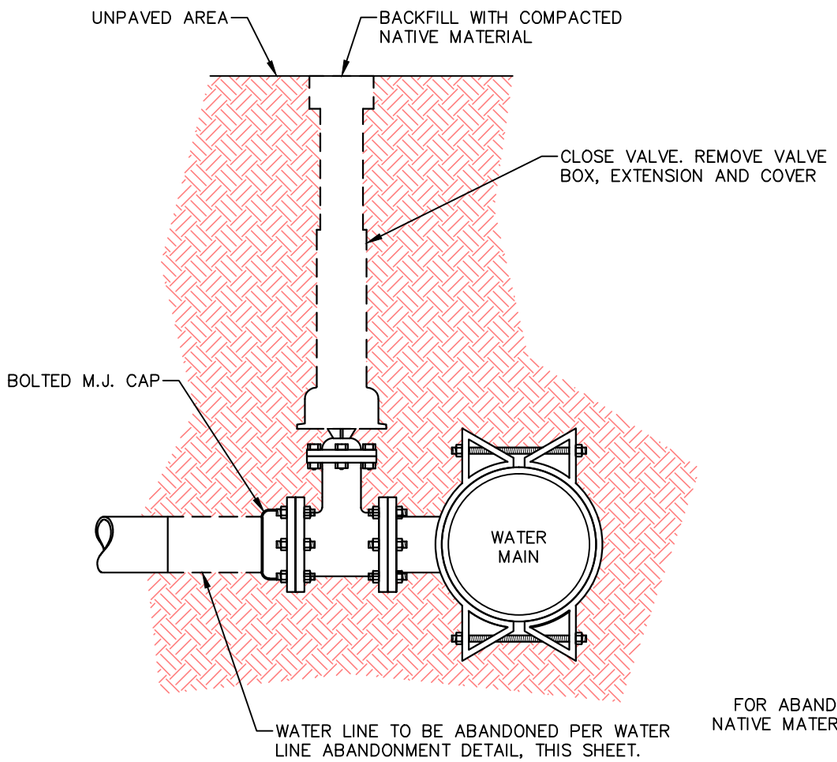

WATER VALVE ABANDONMENT OUTSIDE PAVING

N.T.S.

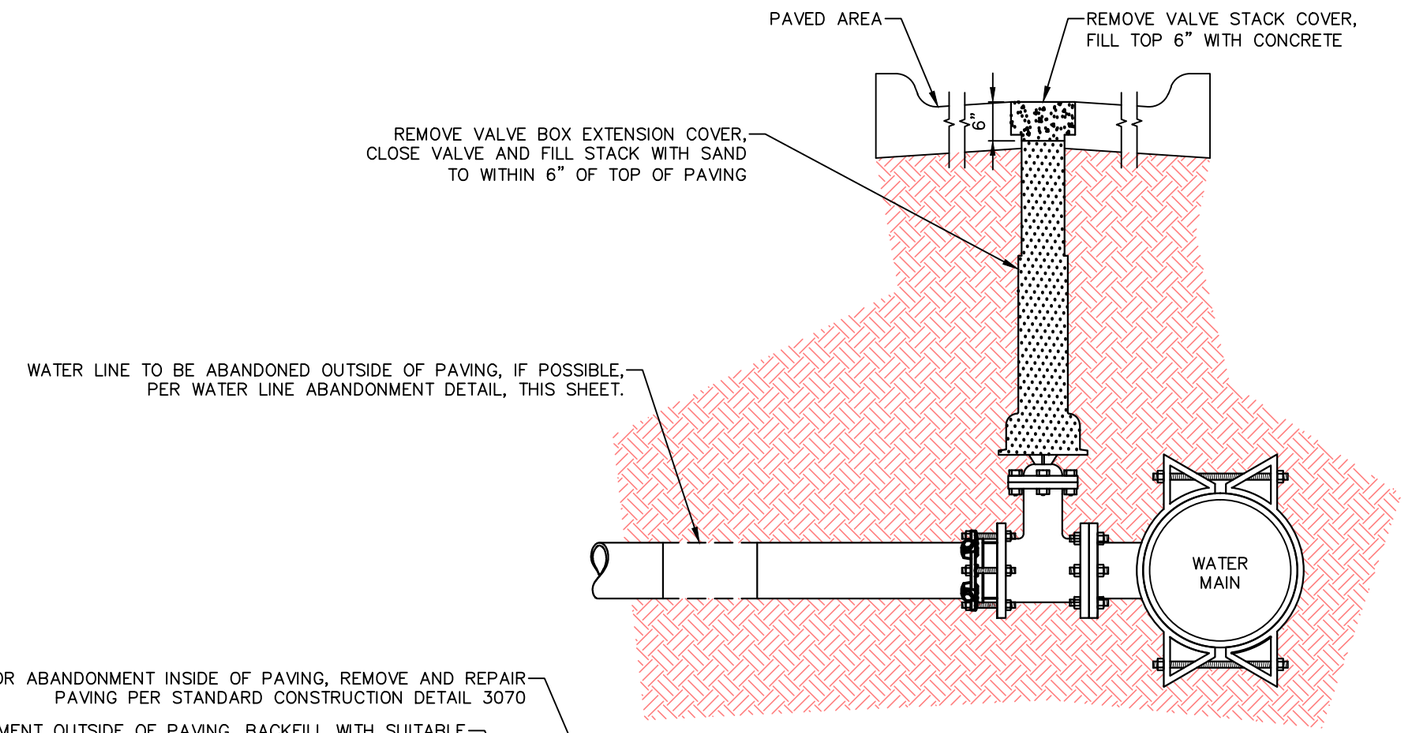

WATER VALVE ABANDONMENT INSIDE PAVING

N.T.S.

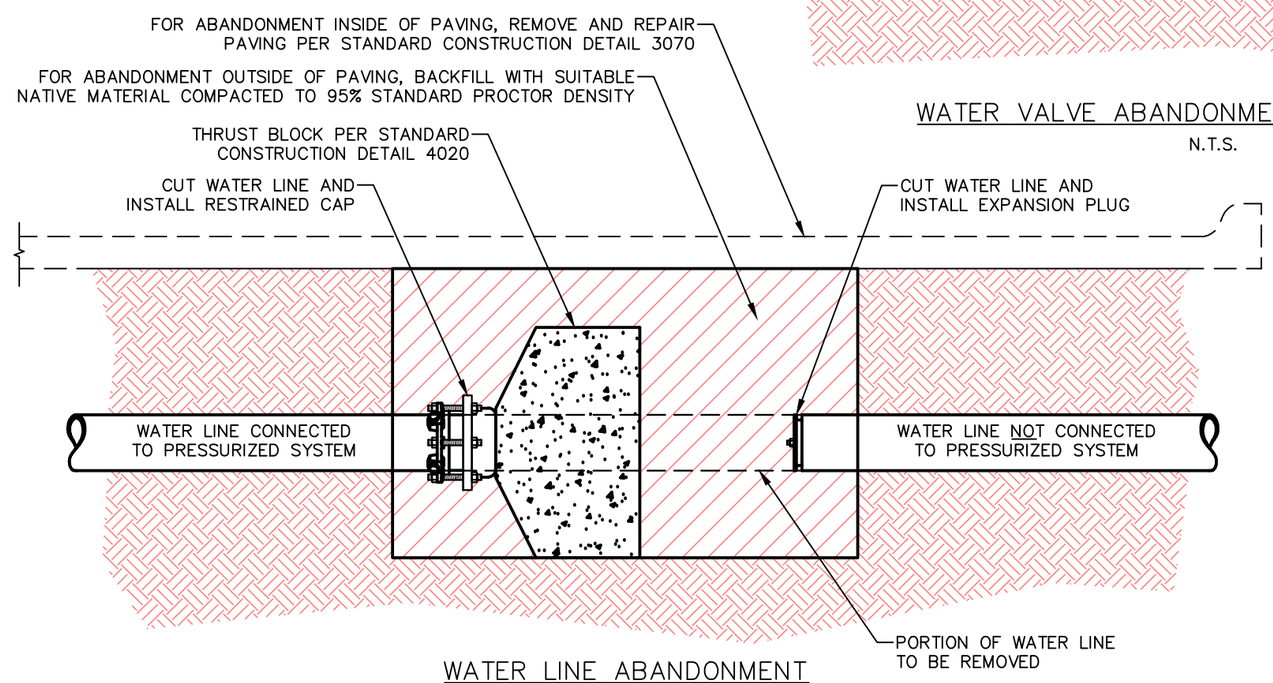

WATER LINE ABANDONMENT

N.T.S.

NOTES:
1. WATER LINE ABANDONMENT OUTSIDE OF PAVING IS PREFERRED..
2. REFER TO THE CITY OF COPPELL WATER UTILITIES LIST OF APPROVED MATERIALS AND PRODUCTS FOR APPROVED BRANDS AND MODELS OF METERS, SETTERS, VALVES AND RELATED ITEMS.

North Central Texas Council of Governments

NOTE: STANDARDS ARE ADOPTED FROM THE NCTOG STANDARD DRAWINGS DATED NOV. '96, WITH LOCAL EXCEPTIONS.

NO.	LOCAL EXCEPTION	BY	DATE
1	NEW DETAIL.	SWL	JUL. '14

THE CITY OF COPPELL TEXAS 1890

STANDARD CONSTRUCTION DETAILS

WATER VALVE AND WATER LINE ABANDONMENT

CITY OF COPPELL DALLAS COUNTY, TEXAS

STD. SPEC. REFERENCE 804.

STANDARD DETAIL 1 4225

PATH: S:\Standard_Details\New_Dets_modified\SDCoppell2005.dwg

WATER DISTRIBUTION
TESTING REQUIREMENTS

1. ALL WATER LINES FOUR (4) INCHES (") DIAMETER AND LARGER ARE TO BE HYDROSTATICALLY TESTED AT ONE HUNDRED AND FIFTY (150) PSI (POUNDS PER SQUARE INCH) FOR FOUR (4) HOURS CONTINUOUS.

2. ALL FIRE WATER LINES FOUR (4) INCHES (") DIAMETER AND LARGER ARE TO BE HYDROSTATICALLY TESTED AT TWO HUNDRED (200) PSI (POUNDS PER SQUARE INCH) FOR FOUR (4) HOURS CONTINUOUS.

3. THE CONTRACTOR SHALL STERILIZE THE INSTALLED PIPE SYSTEM BY THE INJECTION OF A CHLORINE SOLUTION OF SUCH A STRENGTH TO OBTAIN A CHLORINE SOLUTION TO WATER RATIO OF FIFTY (50) PARTS PER MILLION (PPM) THROUGHOUT THE INSTALLED PIPE SYSTEM.

4. THE CHLORINE SOLUTION SHALL REMAIN IN THE INSTALLED PIPE SYSTEM FOR TWENTY-FOUR (24) HOURS, AFTER WHICH THE CONTRACTOR SHALL FLUSH AND FILL THE SYSTEM WITH POTABLE WATER.

5. AFTER THE SYSTEM HAS BEEN FLUSHED, TESTED AND APPROVED BY THE CITY INSPECTOR FOR A NOMINAL CHLORINE RESIDUE, THE CONTRACTOR SHALL TAKE WATER SAMPLES (1 PER 1000 LF) IN THE PRESENCE OF THE CITY INSPECTOR. THESE SAMPLES NORMALLY WILL BE AT EACH END OF THE PROJECT WITH ADDITIONAL SAMPLES AT EACH DEAD END OR AS DEEMED NECESSARY BY THE CITY INSPECTOR. THE CONTRACTOR SHALL SUBMIT THE SAMPLES TO A CITY APPROVED TESTING LABORATORY. THIS LABORATORY SHALL PERFORM TESTS AS REQUIRED BY STATE HEALTH CODES PERTAINING TO POTABLE WATER. SHOULD THESE TESTS SHOW THE SAMPLES PROVIDED ARE NOT ACCEPTABLE FOR POTABLE WATER (COLIFORM, ORGANISMS, SILT, ETC.), THE CONTRACTOR SHALL FLUSH AND/OR RE-STERILIZE THE UNDERGROUND PIPING SYSTEM. RE-SAMPLING SHALL BE REQUIRED. THE COST OF ALL LABORATORY TESTING WILL BE THE RESPONSIBILITY OF THE CONTRACTOR.

6. TRENCH COMPACTION TESTING SHALL BE PERFORMED AT THE RATE OF ONE (1) DENSITY TEST PER THREE HUNDRED (300) LINEAR FEET (LF) PER 12" LIFT, AND MINIMUM REQUIREMENTS FOR DENSITY SHALL BE NINETY-FIVE (95) PERCENT (%) OF THE MAXIMUM DENSITY AS DETERMINED BY ASTM D698.

7. MOISTURE CONTENT OF THE MATERIAL SHALL BE FROM OPTIMUM MOISTURE CONTENT TO PLUS FOUR (4) PERCENT (%) ABOVE OPTIMUM MOISTURE CONTENT.

North Central Texas Council of Governments

NOTE: STANDARDS ARE ADOPTED FROM THE NCTOG STANDARD DRAWINGS DATED NOV. '96, WITH LOCAL EXCEPTIONS.

NO.	LOCAL EXCEPTION	BY	DATE

THE CITY OF COPPELL TEXAS 1890

STANDARD CONSTRUCTION DETAILS

WATER DISTRIBUTION
TESTING REQUIREMENTS

CITY OF COPPELL DALLAS COUNTY, TEXAS

STD. SPEC. REFERENCE

STANDARD DETAIL
4230

PATH: S:\Standard_Details\New_Dets_modified\SDCoppell2005.dwg